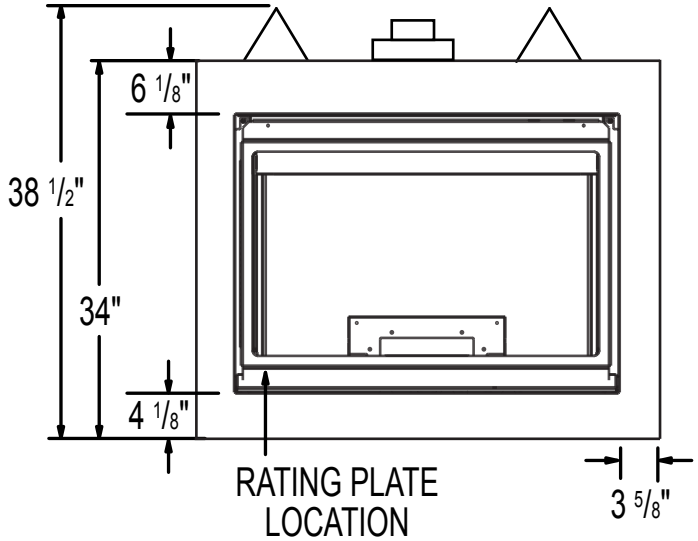
6 1/8"
38 1/2"
34"
4 1/8"
RATING PLATE
LOCATION
3 5/8"

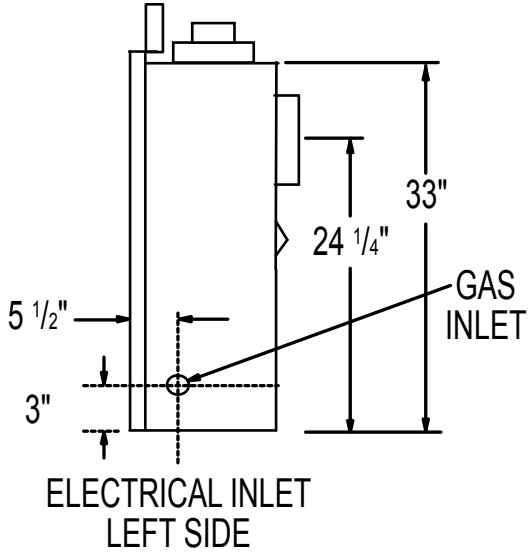
33"
24 1/4"
GAS
INLET
5 1/2"
3"
ELECTRICAL INLET
LEFT SIDE

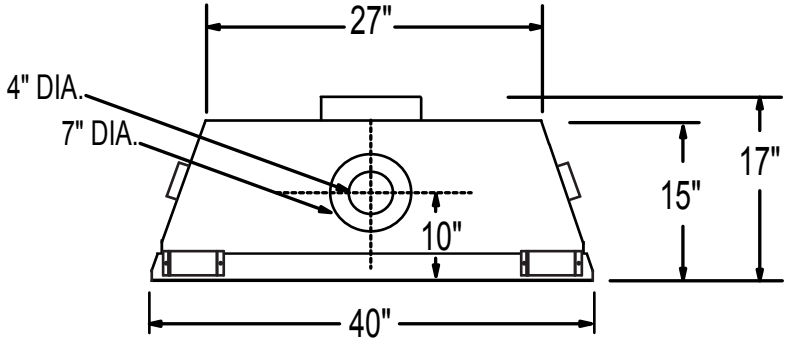
27"
4" DIA.
7" DIA.
17"
15"
10"
40"