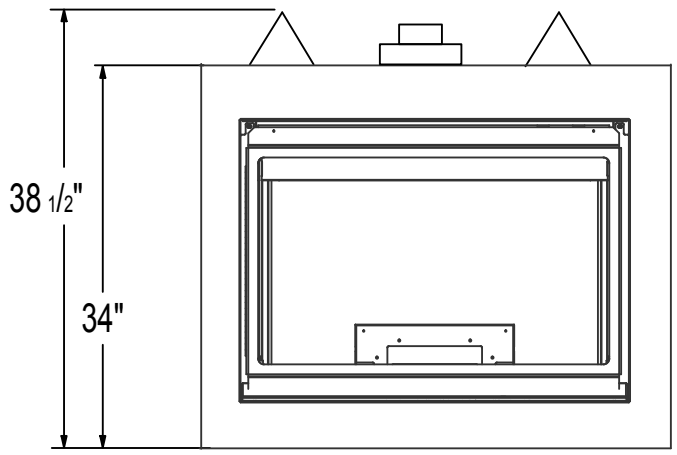
38 1/2"
34"

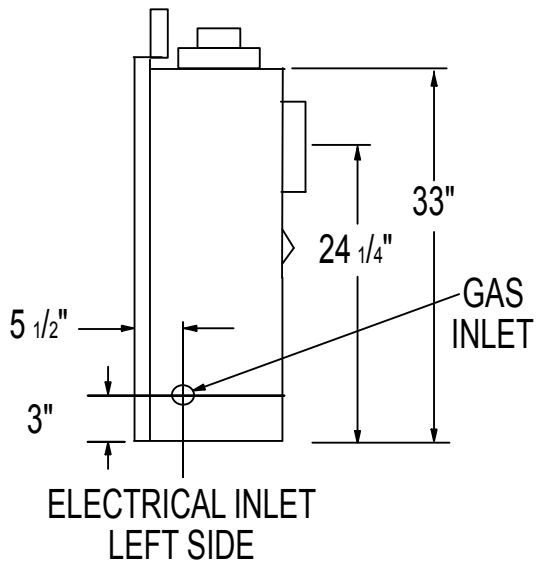
33"
24 1/4"
5 1/2"
3"
GAS
INLET
ELECTRICAL INLET
LEFT SIDE

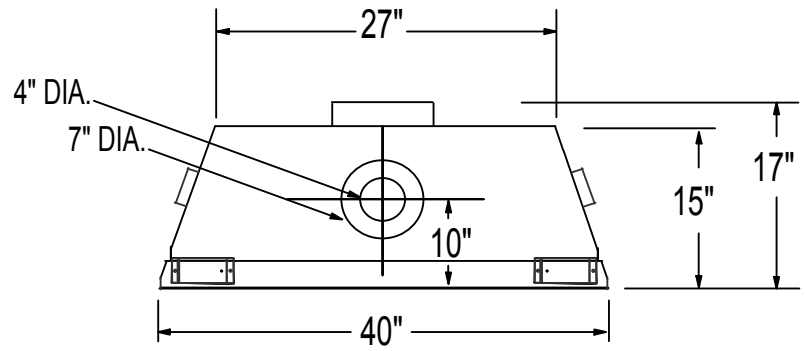
27"
4" DIA.
7" DIA.
17"
15"
10"
40"