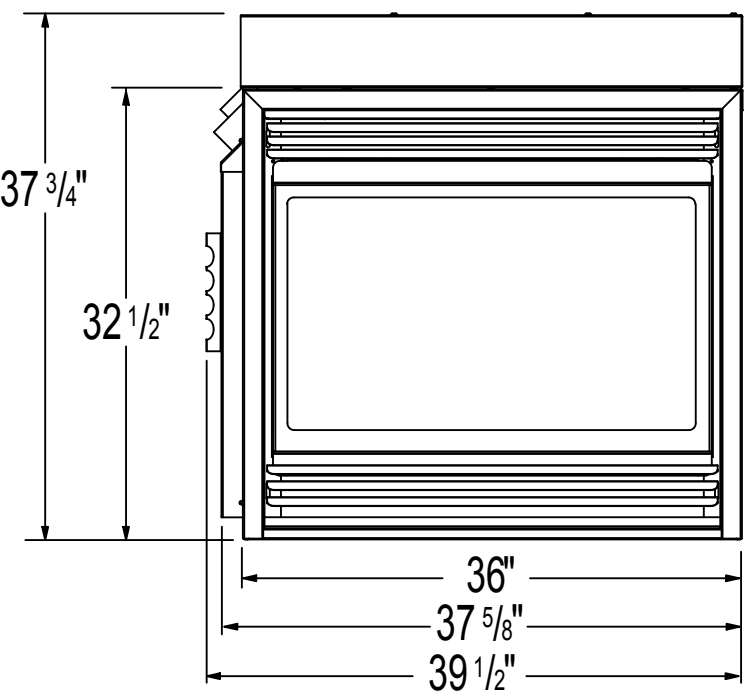
37 3/4"
32 1/2"
36"
37 5/8"
39 1/2"

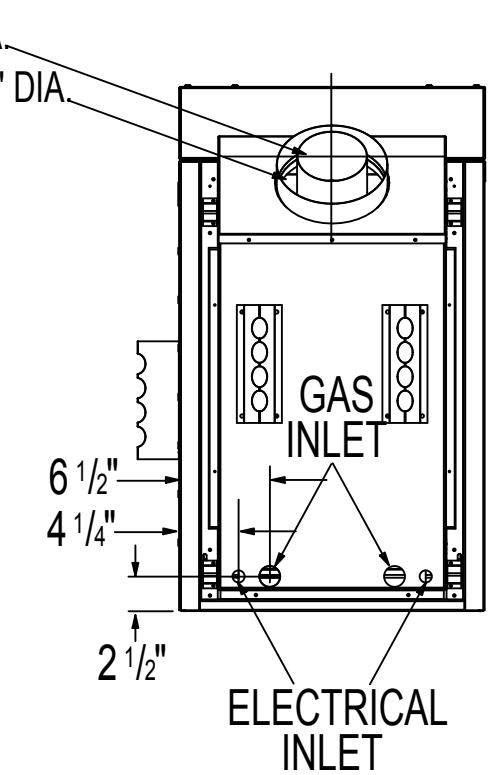
5" DIA.
8" DIA.
GAS
INLET
6 1/2"
4 1/4"
2 1/2"
ELECTRICAL
INLET

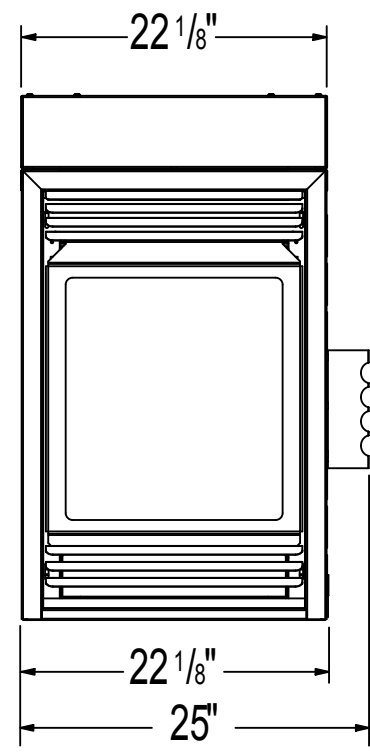
22 1/8"
22 1/8"
25"