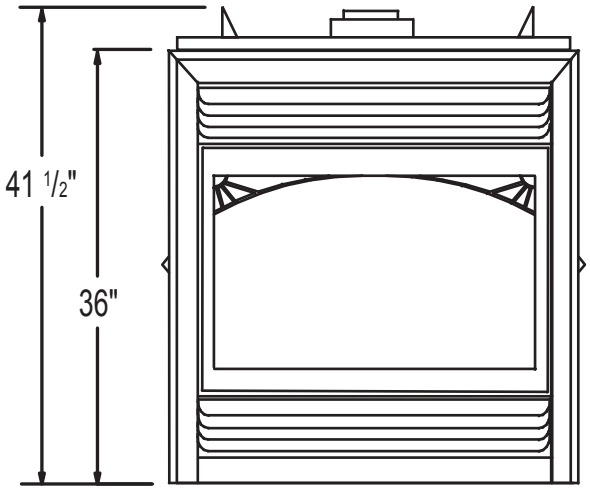
41 1/2"
36"

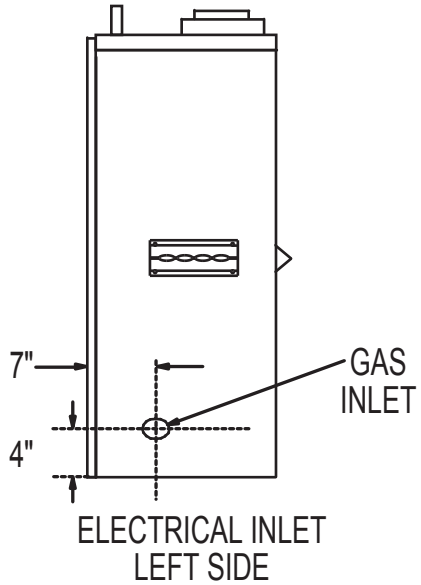
7"
4"
GAS
INLET
ELECTRICAL INLET
LEFT SIDE

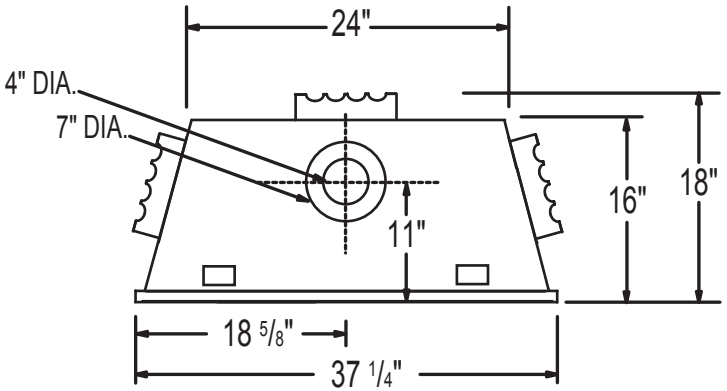
24"
4" DIA.
7" DIA.
11"
16"
18"
18 5/8"
37 1/4"

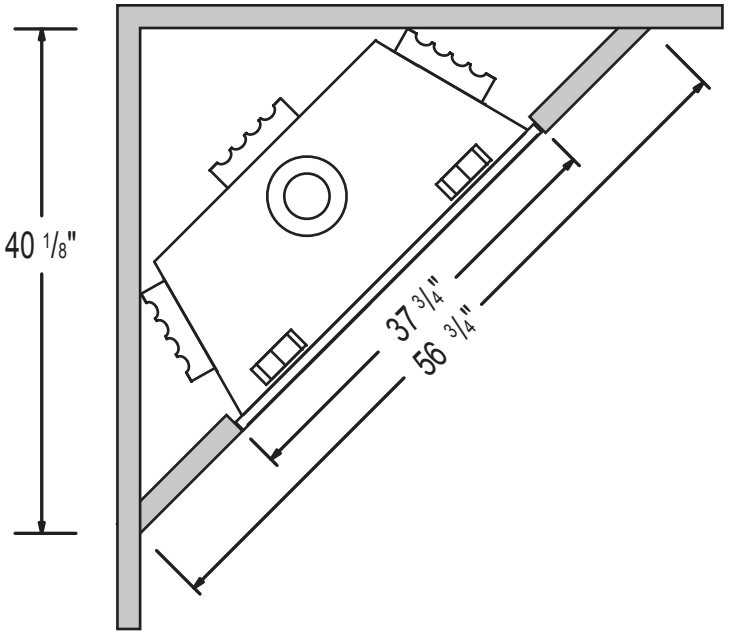
40 1/8"
37 3/4"
56 3/4"