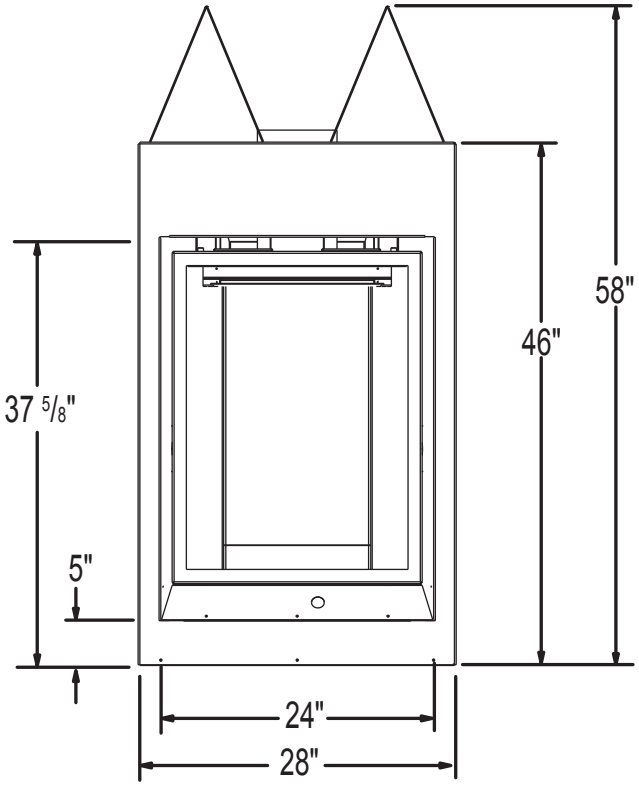
58"
46"
37 5/8"
5"
24"
28"

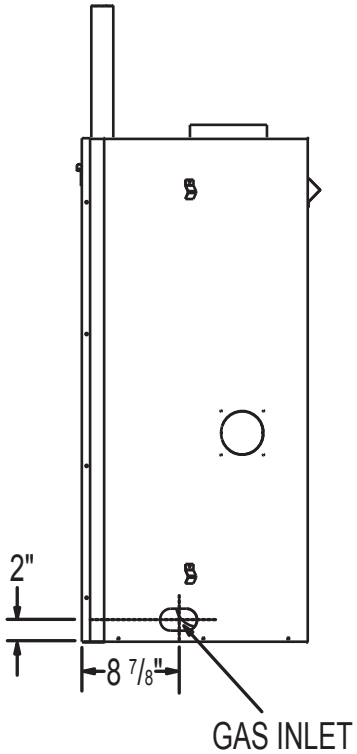
2"
8 7/8"
GAS INLET

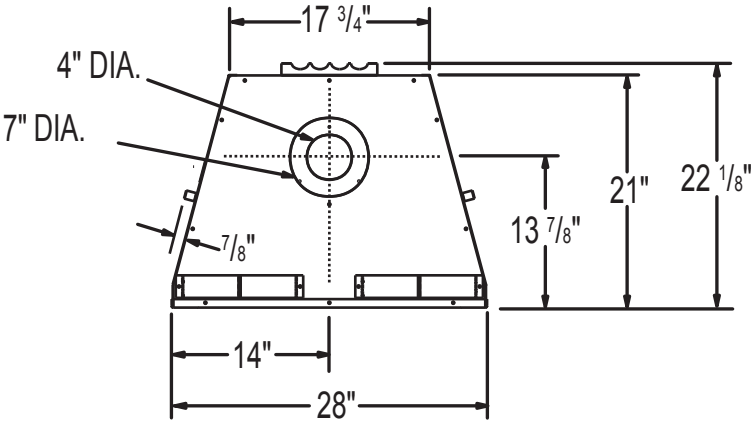
17 3/4"
4" DIA.
7" DIA.
7/8"
13 7/8"
21"
22 1/8"
14"
28"