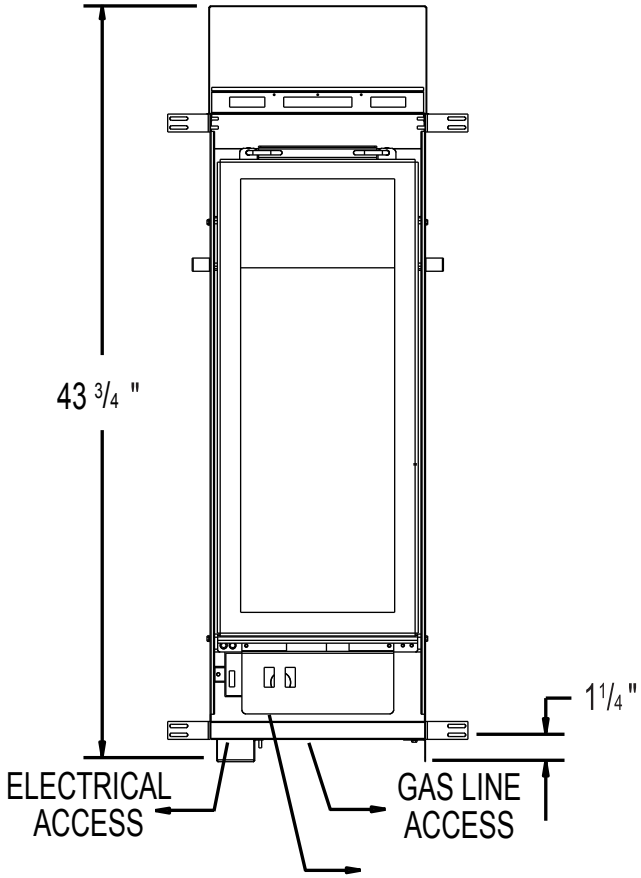
43 3/4 "
1 1/4 "
ELECTRICAL ACCESS
GAS LINE ACCESS

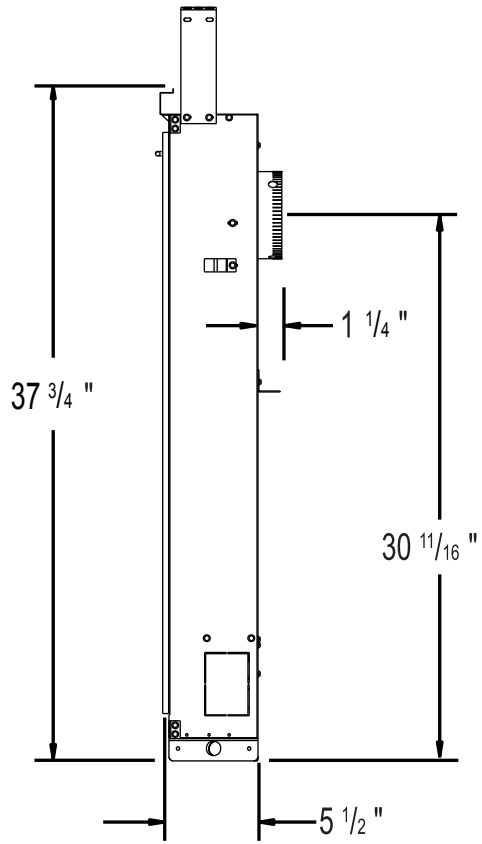
37 3/4 "
1 1/4 "
30 11/16 "
5 1/2 "

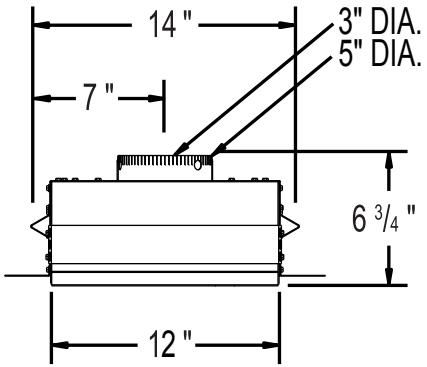
14 "
3" DIA.
5" DIA.
7 "
6 3/4 "
12 "