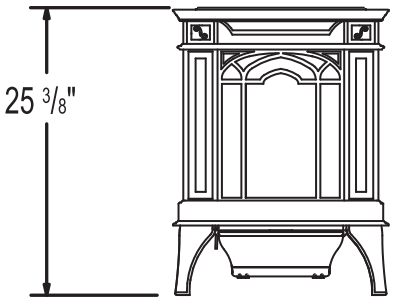
25 3/8"

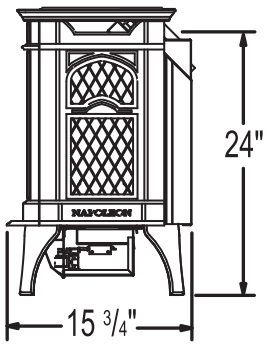
24"
NAPOLEON
15 3/4"

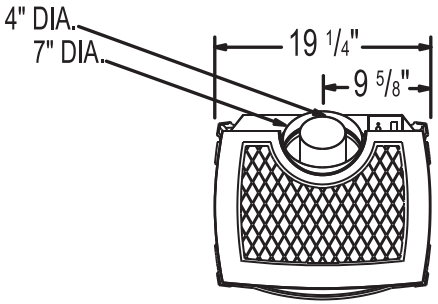
4" DIA.
7" DIA.
19 1/4"
9 5/8"