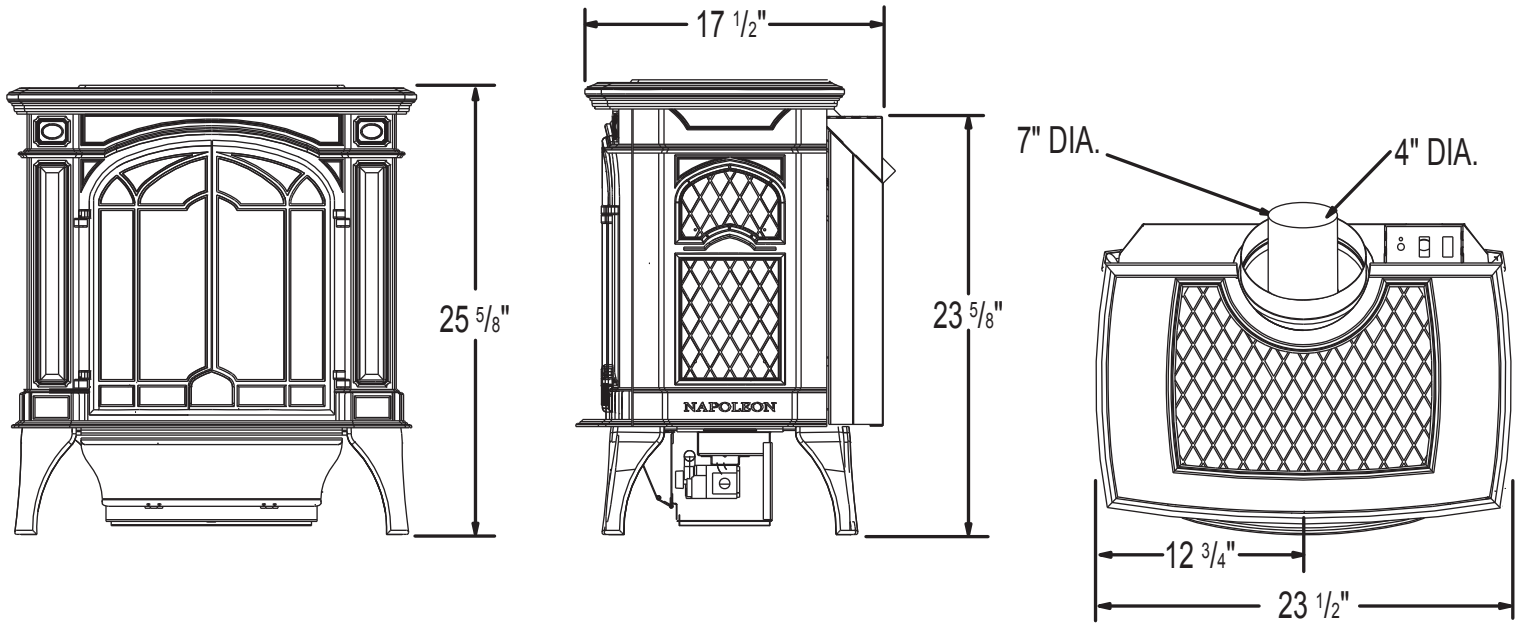
17 1/2"
25 5/8"
23 5/8"
NAPOLEON
7" DIA.
4" DIA.
12 3/4"
23 1/2"