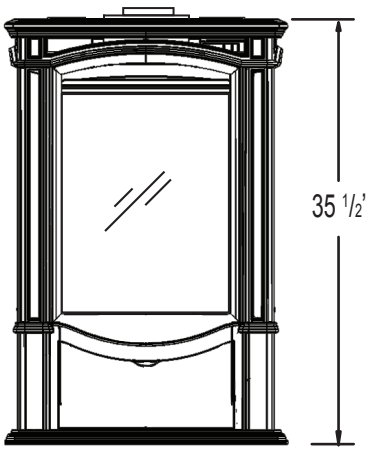
35 1/2”

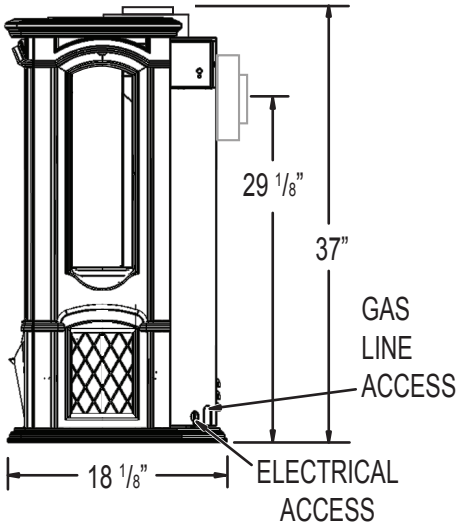
29 1/8”
37”
GAS
LINE
ACCESS
18 1/8”
ELECTRICAL
ACCESS

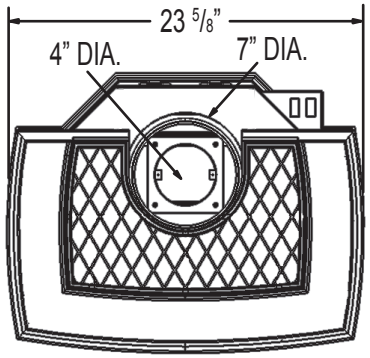
23 5/8”
4” DIA.
7” DIA.