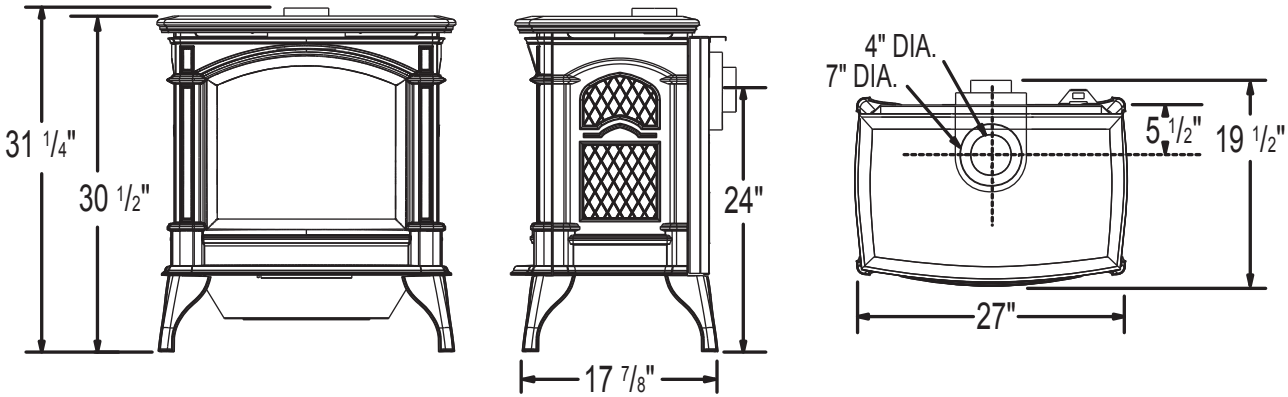
31 1/4"
30 1/2"
24"
17 7/8"
4" DIA.
7" DIA.
5 1/2"
19 1/2"
27"