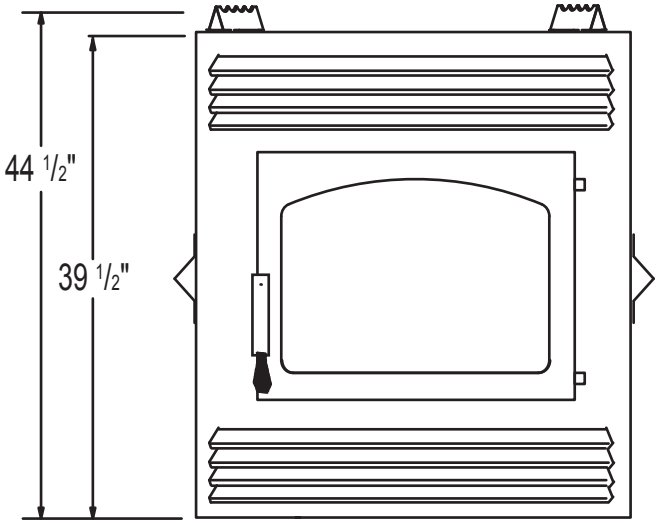
44 1/2"
39 1/2"

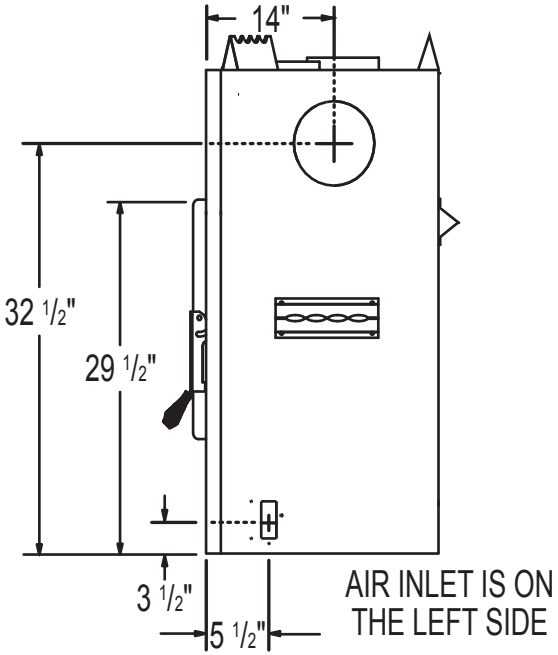
14"
32 1/2"
29 1/2"
3 1/2"
5 1/2"
AIR INLET IS ON
THE LEFT SIDE

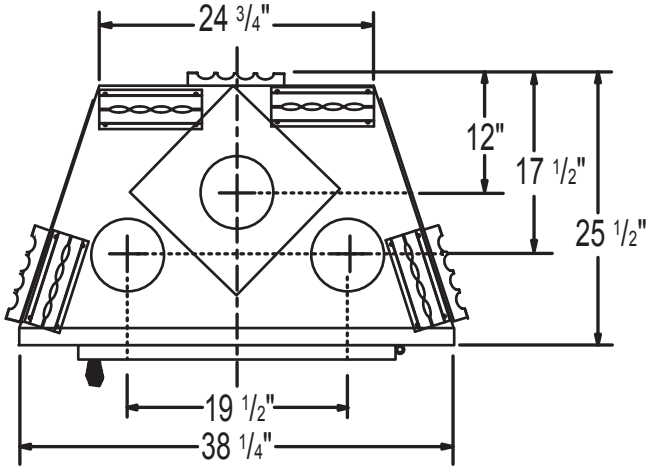
24 3/4"
12"
17 1/2"
25 1/2"
19 1/2"
38 1/4"