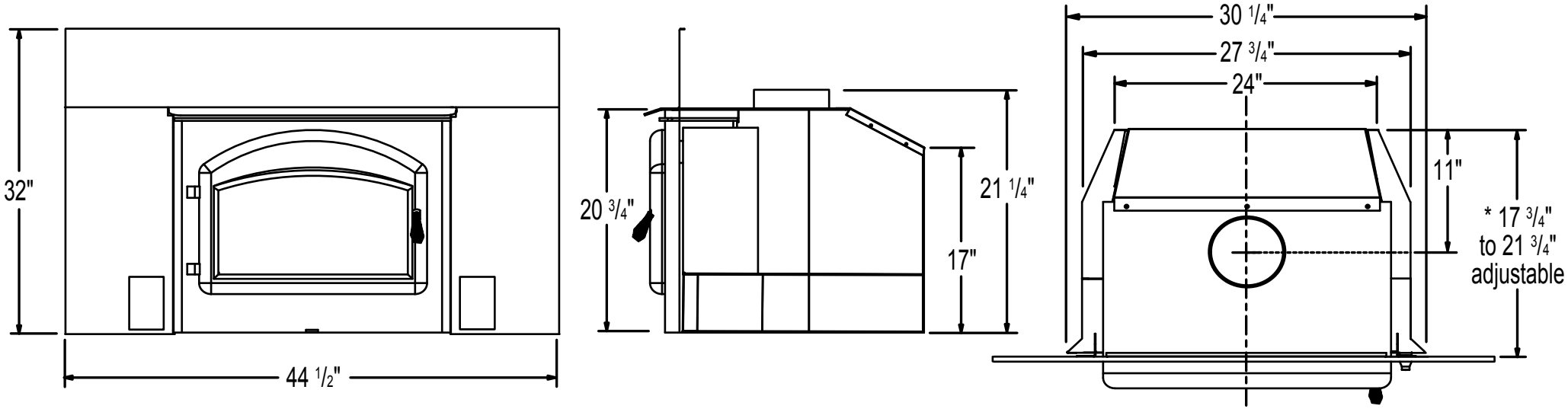
32"
44 1/2"
20 3/4"
21 1/4"
17"
30 1/4"
27 3/4"
24"
11"
* 17 3/4"
to 21 3/4"
adjustable