INSTALLER: LEAVE THIS MANUAL WITH THE APPLIANCE.
CONSUMER: RETAIN THIS MANUAL FOR FUTURE REFERENCE.

NAPOLEON®
QUALITY FIREPLACES

INSTALLATION AND OPERATING INSTRUCTIONS

CERTIFIED UNDER CANADIAN AND AMERICAN NATIONAL STANDARDS: CSA 2.33, ANSI Z21.88 FOR VENTED GAS FIREPLACE HEATERS.

CERTIFIED FOR CANADA AND UNITED STATES USING ANSI/CSA METHODS.

GD82NT-PA
NATURAL GAS

GD82PT-PA
PROPANE

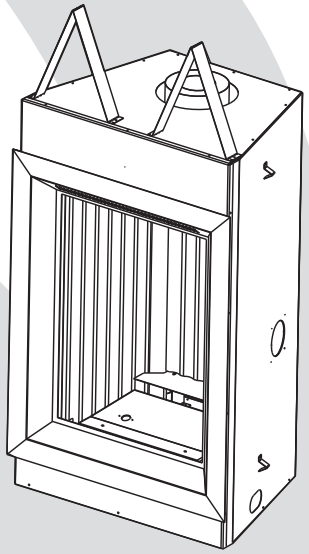

SAFETY INFORMATION

⚠ WARNING

If the information in these instructions are not followed exactly, a fire or explosion may result causing property damage, personal injury or loss of life.

- Do not store or use gasoline or other flammable vapors and liquids in the vicinity of this or any other appliance.
- WHAT TO DO IF YOU SMELL GAS:
- **Do not try to light any appliance.**
- **Do not touch any electrical switch; do not use any phone in your building.**
- **Immediately call your gas supplier from a neighbour's phone. Follow the gas supplier's instructions.**
- **If you cannot reach your gas supplier, call the fire department.**

- Installation and service must be performed by a qualified installer, service agency or the supplier.

This appliance may be installed as an OEM installation in manufactured home (USA only) or mobile home and must be installed in accordance with the manufacturer's instructions and the Manufactured Home Construction and Safety Standard, Title 24 CFR, Part 3280, in the United States or the Standard for Installation in Mobile Homes, CAN/CSA Z240 MH, in Canada.

This appliance is only for use with the type(s) of gas indicated on the rating plate. A conversion kit is supplied with the appliance.

⚠ WARNING

HOT GLASS WILL CAUSE BURNS.

DO NOT TOUCH GLASS UNTIL COOLED.

NEVER ALLOW CHILDREN TO TOUCH GLASS.

APPLY SERIAL NUMBER LABEL FROM CARTON

Serial No. XXXXXX000000
MODEL NO.

HPBA Hearth, Patio & Barbecue Association

GO GREEN ECO-FRIENDLY TECHNOLOGY

Quality System Certified To ISO 9001-2008

C ETL LISTED US Intertek

Wolf Steel Ltd., 24 Napoleon Rd., Barrie, ON, L4M 4Y8 Canada /
103 Miller Drive, Crittenden, Kentucky, USA, 41030
Phone (705)721-1212 • Fax (705)722-6031 • www.napoleonfireplaces.com • ask@napoleonproducts.com

$10.00

1.28A

W415-0748 / A / 11.09.10

TABLE OF CONTENTS

1.0	**INSTALLATION OVERVIEW**	**3**
2.0	**INTRODUCTION**	**4**
2.1	DIMENSIONS	5
2.2	GENERAL INSTRUCTIONS	5
2.3	GENERAL INFORMATION	7
2.4	RATING PLATE INFORMATION	7
3.0	**VENTING**	**8**
3.1	VENTING LENGTHS AND COMPONENTS	9
3.2	TYPICAL VENT INSTALLATION	10
3.3	SPECIAL VENT INSTALLATIONS	11
3.3.1	PERISCOPE TERMINATION	11
3.4	MINIMUM AIR TERMINAL LOCATION CLEARANCES	12
3.5	VENTING APPLICATION FLOW CHART	13
3.6	DEFINITIONS	13
3.7	ELBOW VENT LENGTH VALUES	13
3.8	HORIZONTAL TERMINATION	14
3.9	VERTICAL TERMINATION	16
4.0	**INSTALLATION**	**18**
4.1	WALL AND CEILING PROTECTION	18
4.1.1	HORIZONTAL INSTALLATION	19
4.1.2	VERTICAL INSTALLATION	19
4.2	USING FLEXIBLE VENTING COMPONENTS	20
4.2.1	HORIZONTAL AIR TERMINAL INSTALLATION	20
4.2.2	VERTICAL AIR TERMINAL INSTALLATION	21
4.2.3	APPLIANCE VENT CONNECTION	22
4.3	USING RIGID VENT COMPONENTS	22
4.3.1	HORIZONTAL AIR TERMINAL INSTALLATION	22
4.3.2	EXTENDED HORIZONTAL AIR TERMINAL INSTALLATION	22
4.3.3	VERTICAL AIR TERMINAL INSTALLATION	23
4.4	GAS INSTALLATION	24
4.5	MOBILE HOME INSTALLATION	25
5.0	**FRAMING**	**26**
5.1	MINIMUM CLEARANCE TO COMBUSTIBLES	28
5.2	MINIMUM CLEARANCE TO COMBUSTIBLE ENCLOSURES	29
5.3	MINIMUM MANTEL CLEARANCES	31
6.0	**FINISHING**	**32**
6.1	DOOR REMOVAL / INSTALLATION	32
6.2	LOG SHIPPING BRACKET	33
6.3	DECORATIVE BRICK PANEL INSTALLATION	33
6.4	LOG PLACEMENT	34
6.5	GLOWING EMBERS	34
6.6	AFK82/RFK82 FACING KIT INSTALLATION	35
7.0	**WIRING DIAGRAM / ELECTRICAL INFORMATION**	**36**
7.1	ELECTRICAL CONNECTION	36
7.1.1	HARD WIRING CONNECTION	36
7.1.2	SCHEMATIC	36
8.0	**OPERATION**	**37**
8.1	GENERAL TRANSMITTER LAYOUT	37
8.2	APPLIANCE OPERATION	37
8.3	HAND HELD REMOTE OPERATIONS	37
8.4	TEMPERATURE DISPLAY	38
8.5	ROOM THERMOSTAT	38
8.6	SMART THERMOSTAT	38
8.7	FLAME HEIGHT	38
8.8	FAN SPEED	39
8.9	CHILD PROOF FUNCTION	39
8.10	REMOTE AUXILIARY OUTLET	39
8.11	LOW BATTERY / MANUAL BYPASS	40
8.12	IN THE EVENT OF A POWER FAILURE	40
8.13	FAN CONTROL MODULE	40
8.14	TIMED BLOWER	40
9.0	**OPERATING INSTRUCTIONS**	**41**
10.0	**ADJUSTMENTS**	**42**
10.1	RESTRICTING VERTICAL VENTS	42
10.2	PILOT BURNER ADJUSTMENT	42
10.3	VENTURI ADJUSTMENT	43
10.4	FLAME CHARACTERISTICS	43
11.0	**MAINTENANCE**	**44**
11.1	BURNER AND VALVE REPLACEMENT	44
11.2	SPARK MODULE BATTERY INSTALLATION	45
11.3	BLOWER REPLACEMENT	45
11.4	NIGHT LIGHT™ REPLACEMENT	46
11.5	GLASS / DOOR REPLACEMENT	46
11.6	CARE OF GLASS	47
11.7	CARE OF PLATED PARTS	47
12.0	**REPLACEMENT PARTS**	**48**
13.0	**TROUBLE SHOOTING GUIDE**	**52**
14.0	**WARRANTY**	**55**
15.0	**SERVICE HISTORY**	**56**

1.0 INSTALLATION OVERVIEW

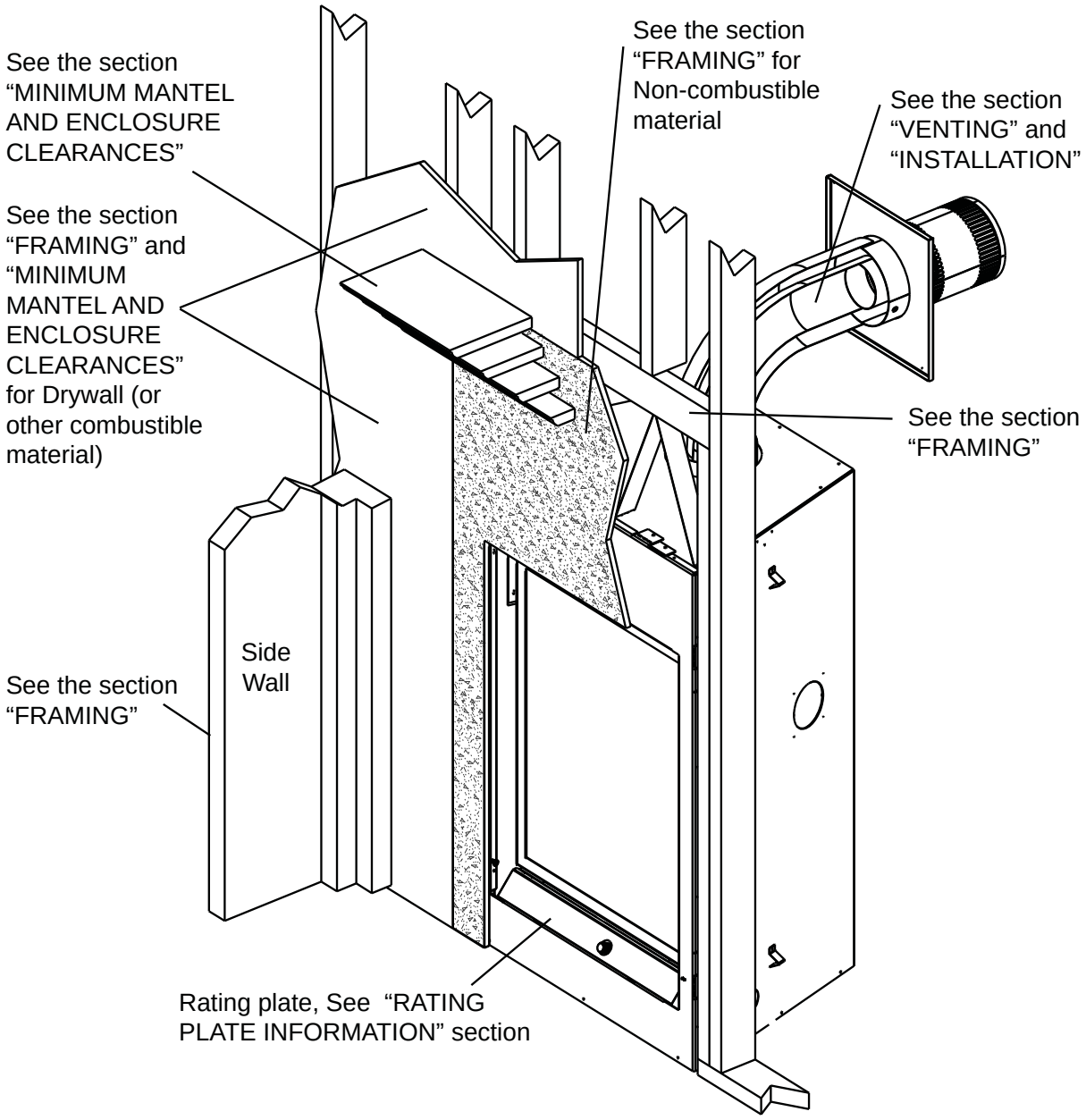

<u>NOTE:</u> Changes, other than editorial, are denoted by a vertical line in the margin.

2.0 INTRODUCTION

⚠ WARNING

- **THIS APPLIANCE IS HOT WHEN OPERATED AND CAN CAUSE SEVERE BURNS IF CONTACTED.**
- **ANY CHANGES TO THIS APPLIANCE OR IT'S CONTROLS CAN BE DANGEROUS AND IS PROHIBITED.**
- Do not operate appliance before reading and understanding operating instructions. Failure to operate appliance according to operating instructions could cause fire or injury.
- Risk of fire or asphyxiation do not operate appliance with fixed glass removed.
- Do not connect 110 volts to the control valve.
- Risk of burns. The appliance should be turned off and cooled before servicing.
- Do not install damaged, incomplete or substitute components.
- Risk of cuts and abrasions. Wear protective gloves and safety glasses during installation. Sheet metal edges may be sharp.
- Do not burn wood or other materials in this appliance.
- Children and adults should be alerted to the hazards of high surface temperature and should stay away to avoid burns or clothing ignition.
- Young children should be carefully supervised when they are in the same room as the appliance. Toddlers, young children and others may be susceptible to accidental contact burns. A physical barrier is recommended if there are at risk individuals in the house. To restrict access to an appliance or stove, install an adjustable safety gate to keep toddlers, young children and other at risk individuals out of the room and away from hot surfaces.
- Clothing or other flammable material should not be placed on or near the appliance.
- Due to high temperatures, the appliance should be located out of traffic and away from furniture and draperies.
- Ensure you have incorporated adequate safety measure to protect infants/toddlers from touching hot surfaces.
- Even after the appliance is out, the glass and/or screen will remain hot for an extended period of time.
- Check with your local hearth specialty dealer for safety screens and hearth guards to protect children from hot surfaces. These screens and guards must be fastened to the floor.
- Any safety screen or guard removed for servicing must be replaced prior to operating the appliance.
- The appliance is a vented gas-fired appliance. Do not burn wood or other materials in the appliance.
- It is imperative that the control compartments, burners and circulating blower and its passageway in the appliance and venting system are kept clean. The appliance and its venting system should be inspected before use and at least annually by a qualified service person. More frequent cleaning may be required due to excessive lint from carpeting, bedding material, etc. The appliance area must be kept clear and free from combustible materials, gasoline and other flammable vapors and liquids.
- Under no circumstances should this appliance be modified.
- This appliance must not be connected to a chimney flue pipe serving a separate solid fuel burning appliance.
- Do not use this appliance if any part has been under water. Immediately call a qualified service technician to inspect the appliance and to replace any part of the control system and any gas control which has been under water.
- Do not operate the appliance with the glass door removed, cracked or broken. Replacement of the glass should be done by a licensed or qualified service person.
- Do not strike or slam shut the appliance glass door.
- When equipped with pressure relief doors, they must be kept closed while the appliance is operating to prevent exhaust fumes containing carbon monoxide, from entering into the home. Temperatures of the exhaust escaping through these openings can also cause the surrounding combustible materials to overheat and catch fire.Only doors / optional fronts certified with the unit are to be installed on the appliance.
- Only doors / optional fronts certified with the unit are to be installed on the appliance.
- Keep the packaging material out of reach of children and dispose of the material in a safe manner. As with all plastic bags, these are not toys and should be kept away from children and infants.
- As with any combustion appliance, we recommend having your appliance regularly inspected and serviced as well as having a Carbon Monoxide Detector installed in the same area to defend you and your family against Carbon Monoxide.
- Ensure clearances to combustibles are maintained when building a mantel or shelves above the appliance. Elevated temperatures on the wall or in the air above the appliance can cause melting, discolouration or damage to decorations, a T.V. or other electronic components.
- This appliance uses and requires a fast acting thermocouple. Replace only with a fast acting thermocouple supplied by Wolf Steel Ltd.

3.1C

2.1 DIMENSIONS

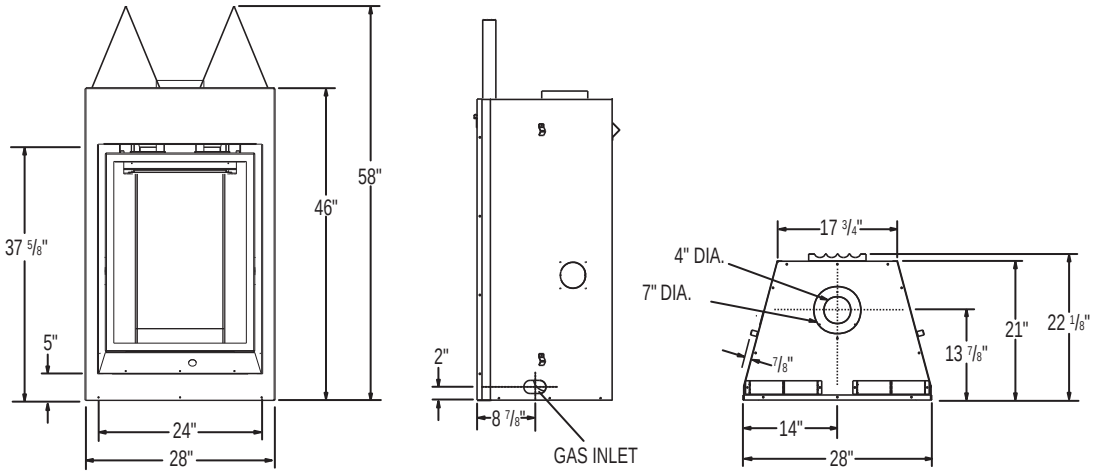

2.2 GENERAL INSTRUCTIONS

WARNING
ALWAYS LIGHT THE PILOT WHETHER FOR THE FIRST TIME OR IF THE GAS SUPPLY HAS RAN OUT, WITH THE GLASS DOOR OPENED OR REMOVED.
PROVIDE ADEQUATE CLEARANCE FOR SERVICING AND OPERATING THE APPLIANCE.
PROVIDE ADEQUATE VENTILATION.
NEVER OBSTRUCT THE FRONT OPENING OF THE APPLIANCE.
OBJECTS PLACED IN FRONT OF THE APPLIANCE MUST BE KEPT A MINIMUM OF 48” FROM THE FRONT FACE OF THE UNIT.
SURFACES AROUND AND ESPECIALLY ABOVE THE APPLIANCE CAN BECOME HOT. AVOID CONTACT WHEN THE APPLIANCE IS OPERATING.
FIRE RISK. EXPLOSION HAZARD.
HIGH PRESSURE WILL DAMAGE VALVE. DISCONNECT GAS SUPPLY PIPING BEFORE PRESSURE TESTING GAS LINE AT TEST PRESSURES ABOVE 1/2 PSIG. CLOSE THE MANUAL SHUT-OFF VALVE BEFORE PRESSURE TESTING GAS LINE AT TEST PRESSURES EQUAL TO OR LESS THAN 1/2 PSIG.
USE ONLY WOLF STEEL APPROVED OPTIONAL ACCESSORIES AND REPLACEMENT PARTS WITH THIS APPLIANCE. USING NON-LISTED ACCESSORIES (BLOWERS, DOORS, LOUVRES, TRIMS, GAS COMPONENTS, VENTING COMPONENTS, ETC.) COULD RESULT IN A SAFETY HAZARD AND WILL VOID THE WARRANTY AND CERTIFICATION.

THIS GAS APPLIANCE SHOULD BE INSTALLED AND SERVICED BY A QUALIFIED INSTALLER to conform with local codes. Installation practices vary from region to region and it is important to know the specifics that apply to your area, for example in Massachusetts State:

- This product must be installed by a licensed plumber or gas fitter when installed within the commonwealth of Massachusetts.
- The appliance damper must be removed or welded in the open position prior to installation of a appliance insert or gas log.
- The appliance off valve must be a “T” handle gas cock.
- The flexible connector must not be longer than 36 inches.
- A Carbon Monoxide detector is required in all rooms containing gas fired appliances.
- The appliance is not approved for installation in a bedroom or bathroom unless the unit is a direct vent sealed combustion product.

The installation must conform with local codes or, in absence of local codes, the National Gas and Propane Installation Code CSA B149.1 in Canada, or the National Fuel Gas Code, ANSI Z223.1 / NFPA 54 in the United States. Suitable for mobile home installation if installed in accordance with the current standard CAN/CSA Z240MH Series, for gas equipped mobile homes, in Canada or ANSI Z223.1 and NFPA 54 in the United States.

NATIONAL FIREPLACE INSTITUTE
NFI
CERTIFIED
www.nficertified.org

We suggest that our gas hearth products be installed and serviced by professionals who are certified in the U.S. by the National Fireplace Institute® (NFI) as NFI Gas Specialists

As long as the required clearance to combustibles is maintained, the most desirable and beneficial location for an appliance is in the center of a building, thereby allowing the most efficient use of the heat created. The location of windows, doors and the traffic flow in the room where the appliance is to be located should be considered. If possible, you should choose a location where the vent will pass through the house without cutting a floor or roof joist.

If the appliance is installed directly on carpeting, vinyl tile or other combustible material other than wood flooring, the appliance shall be installed on a metal or wood panel extending the full width and depth.

Some appliances have optional fans or blowers. If an optional fan or blower is installed, the junction box must be electrically connected and grounded in accordance with local codes, use the current CSA C22.1 Canadian Electrical Code in Canada or the ANSI/NFPA 70 National Electrical code in the United States.

4.1A

2.3 GENERAL INFORMATION

FOR YOUR SATISFACTION, THIS APPLIANCE HAS BEEN TEST-FIRED TO ASSURE ITS OPERATION AND QUALITY!

Appliance		
	NG	**LP**
Altitude (FT)	0 - 4,500	0 - 4,500
Max. Input (BTU/HR)	26,000	26,000
Max. Output Steady State (BTU/HR)	16,150	16,150
Efficiency (w/the fan on)	62%	62%
Min. Inlet Gas Supply Pressure	4.5” Water Column	11” Water Column
Max. Inlet Gas Supply Pressure	7” Water Column	13” Water Column
Manifold Pressure (Under Flow Conditions)	3.5” Water Column	10” Water Column

When the appliance is installed at elevations above 4,500ft, and in the absence of specific recommendations from the local authority having jurisdiction, the certified high altitude input rating shall be reduced at the rate of 4% for each additional 1,000ft.

This appliance is certified to be installed in an aftermarket permanently located, manufactured (mobile) home, where not prohibited by local codes.

This appliance is only for use with the type of gas indicated on the rating plate. This appliance is not convertible for use with other gases, unless a certified kit is used. No external electricity (110 volts or 24 volts) is required for the gas system operation.

Expansion / contraction noises during heating up and cooling down cycles are normal and are to be expected. Change in flame appearance from “HI” to “LO” is more evident in natural gas than in propane.

<u>NOTE:</u> The protective wrap on plated parts is best removed when the assembly is at room temperature but this can be improved if the assembly is warmed, using a hair dryer or similar heat source.

2.4 RATING PLATE INFORMATION

<u>INSTALLER:</u> It is your responsibility to check off the appropriate box on the rating plate according to the model, venting and gas type of the appliance.

For rating plate location, see “INSTALLATION OVERVIEW” section.

This illustration is for reference only. Refer to the rating plate on the appliance for accurate information.

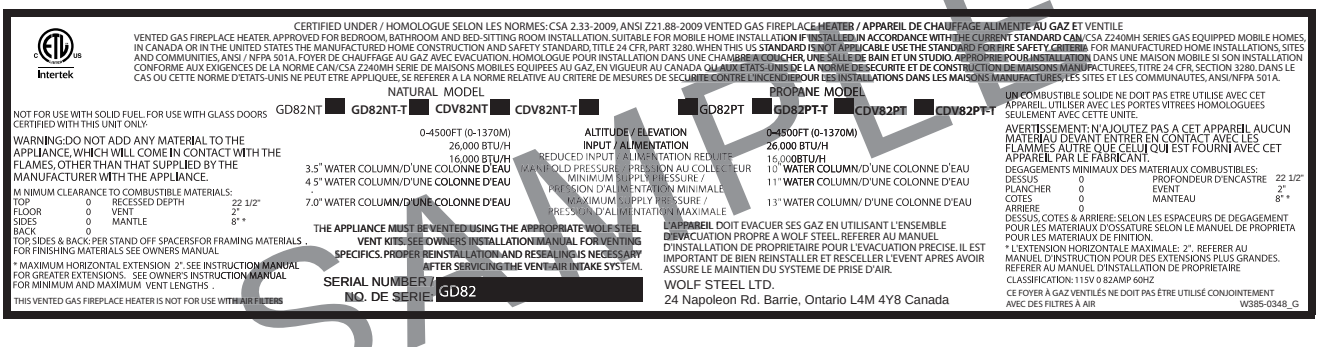

3.0 VENTING

⚠ WARNING

RISK OF FIRE, MAINTAIN SPECIFIED AIR SPACE CLEARANCES TO VENT PIPE AND APPLIANCE.

IF VENTING IS INCLUDED WITH SPACERS THE VENT SYSTEM MUST BE SUPPORTED EVERY 3 FEET FOR BOTH VERTICAL AND HORIZONTAL RUNS. USE SUPPORTS OR EQUIVALENT NON-COMBUSTIBLE STRAPPING TO MAINTAIN THE REQUIRED CLEARANCE FROM COMBUSTIBLES. USE WOLF STEEL LTD. SUPPORT RING ASSEMBLY W010-0370 OR EQUIVALENT NON-COMBUSTIBLE STRAPPING TO MAINTAIN THE MINIMUM CLEARANCE TO COMBUSTIBLES FOR BOTH VERTICAL AND HORIZONTAL RUNS. SPACERS ARE ATTACHED TO THE INNER PIPE AT PREDETERMINED INTERVALS TO MAINTAIN AN EVEN AIR GAP TO THE OUTER PIPE. THIS GAP IS REQUIRED FOR SAFE OPERATION. A SPACER IS REQUIRED AT THE START, MIDDLE AND END OF EACH ELBOW TO ENSURE THIS GAP IS MAINTAINED. THESE SPACERS MUST NOT BE REMOVED.

THIS APPLIANCE USES A 4” EXHAUST / 7” AIR INTAKE VENT PIPE SYSTEM.
Refer to the section applicable to your installation.

For safe and proper operation of the appliance follow the venting instruction exactly. Deviation from the minimum vertical vent length can create difficulty in burner start-up and/or carboning. Under extreme vent configurations, allow several minutes (5-15) for the flame to stabilize after ignition. Vent lengths that pass through unheated spaces (attics, garages, crawl spaces) should be insulated with the insulation wrapped in a protective sleeve to minimize condensation. Provide a means for visually checking the vent connection to the appliance after the appliance is installed. Use a firestop, vent pipe shield or attic insulation shield when penetrating interior walls, floor or ceiling.
NOTE: If for any reason the vent air intake system is disassembled; reinstall per the instructions provided for the initial installation.

7.1

3.1 VENTING LENGTHS AND COMPONENTS

Use only Wolf Steel, Simpson Dura-Vent, Selkirk Direct Temp, American Metal Amerivent or Metal-Fab venting components. Minimum and maximum vent lengths, for both horizontal and vertical installations, and air terminal locations for either system are set out in this manual and must be adhered to. For Simpson Dura-Vent, Selkirk Direct Temp, American Metal Amerivent and Metal-Fab follow the installation procedure provided with the venting components.

A starter adaptor must be used with the following vent systems and may be purchased from the corresponding supplier:

PART	4”/7”	SUPPLIER	WEBSITE
Duravent	W175-0053	Wolf Steel	www.duravent.com
Amerivent	4DSC-N2	American Metal	www.americanmetalproducts.com
Direct Temp	4DT-AAN	Selkirk	www.selkirkcorp.com
SuperSeal	4DNA	Metal-Fab	www.mtlfab.com

For Simpson Dura-Vent, Selkirk Direct Temp, American Metal Amerivent and Metal-Fab follow the installation procedure found on the website for your venting supplier.

For vent systems that provide seals on the inner exhaust flue, only the outer air intake joints must be sealed using a red high temperature silicone (RTV). This same sealant may be used on both the inner exhaust and outer intake vent pipe joints of all other approved vent systems except for the exhaust vent pipe connection to the appliance flue collar which must be sealed using the black high temperature sealant Mill Pac. High temperature sealant must be ordered separately.

When using Wolf Steel venting components, use only approved Wolf Steel rigid / flexible components with the following termination kits: wall terminal kit **GD222R**, or 1/12 to 7/12 pitch roof terminal kit **GD110**, 8/12 to 12/12 roof terminal kit **GD111**, flat roof terminal kit **GD112** or periscope kit **GD201** (for wall penetration below grade). With flexible venting, in conjunction with the various terminations, use either the 5 foot vent kit **GD220** or the 10 foot vent kit **GD330**.

For optimum flame appearance and appliance performance, keep the vent length and number of elbows to a minimum. The air terminal must remain unobstructed at all times. Examine the air terminal at least once a year to verify that it is unobstructed and undamaged.
Rigid and flexible venting systems must not be combined. Different venting manufacturer components must not be combined.

These vent kits allow for either horizontal or vertical venting of the appliance. The maximum allowable horizontal run is 20 feet. The maximum allowable vertical vent length is 40 feet. The maximum number of vent connections is two horizontally or three vertically (excluding the appliance and the air terminal connections) when using flexible venting.

Horizontal runs may have a 0” rise per foot however for optimum performance it is recommended that all horizontal runs have a minimum 1” rise per foot using flexible venting. For safe and proper operation of the appliance, follow the venting instructions exactly.

A terminal shall not terminate directly above a sidewalk or paved driveway which is located between two single family dwellings and serves both dwellings. Local codes or regulations may require different clearances.
Do not allow the inside liner to bunch up on horizontal or vertical runs and elbows. Keep it pulled tight. A 1¼” air gap all around between the inner liner and outer liner is required for safe operation.

8.7

3.2 TYPICAL VENT INSTALLATION

⚠ WARNING

THE FIRST 2 FEET OF OUTER 7 " DIAMETER VENT PIPE FROM THE APPLIANCE MUST BE WRAPPED IN THE 1" THICK INSULATION SLEEVE (SUPPLIED). MAKE SURE THE INSULATION IS PULLED DOWN TIGHT TO THE APPLIANCE WHEN INSTALLED. THERE AFTER, A 2" CLEARANCE ALL AROUND THE VENT PIPE FROM COMBUSTIBLE MATERIALS ON ALL HORIZONTAL VENT SECTIONS IS REQUIRED.

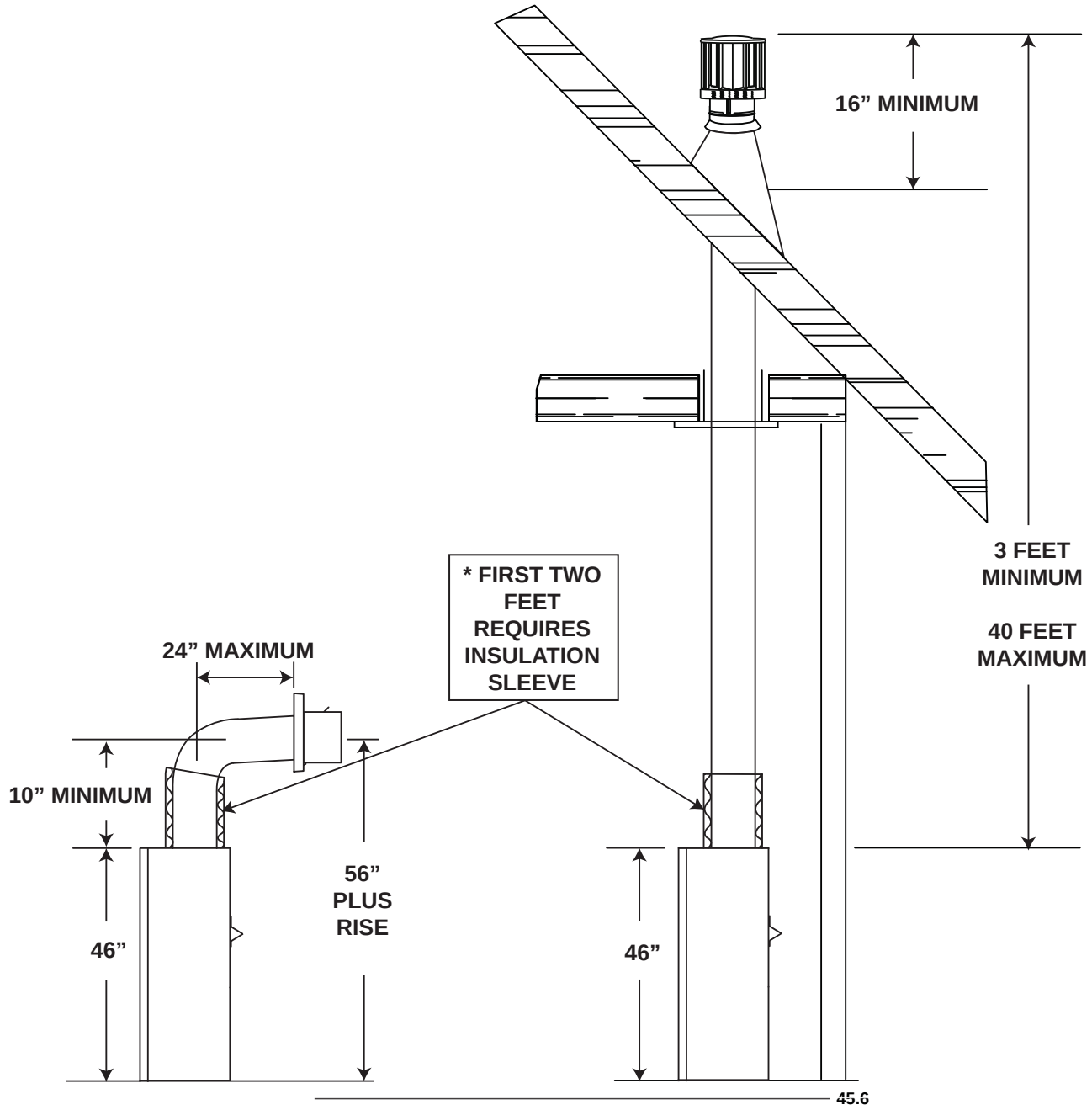

When venting, the horizontal run must be kept to a maximum of 20 feet. If a 20 foot horizontal run is required, the appliance must have a minimum vertical rise immediately off the appliance of 57". When terminating vertically, the vertical rise is a minimum 3 feet and a maximum 40 feet above the appliance.

3.3 SPECIAL VENT INSTALLATIONS

3.3.1 PERISCOPE TERMINATION

⚠ WARNING

THE FIRST 2 FEET OF OUTER 7 " DIAMETER VENT PIPE FROM THE APPLIANCE MUST BE WRAPPED IN THE 1" THICK INSULATION SLEEVE (SUPPLIED). MAKE SURE THE INSULATION IS PULLED DOWN TIGHT TO THE APPLIANCE WHEN INSTALLED. THERE AFTER, A 2" CLEARANCE ALL AROUND THE VENT PIPE FROM COMBUSTIBLE MATERIALS ON ALL HORIZONTAL VENT SECTIONS IS REQUIRED.

Use the periscope kit to locate the air termination above grade. The periscope must be installed so that when final grading is completed, the bottom air slot is located a minimum 12" above grade. The maximum allowable vent length (including both rise and run) is 10'.

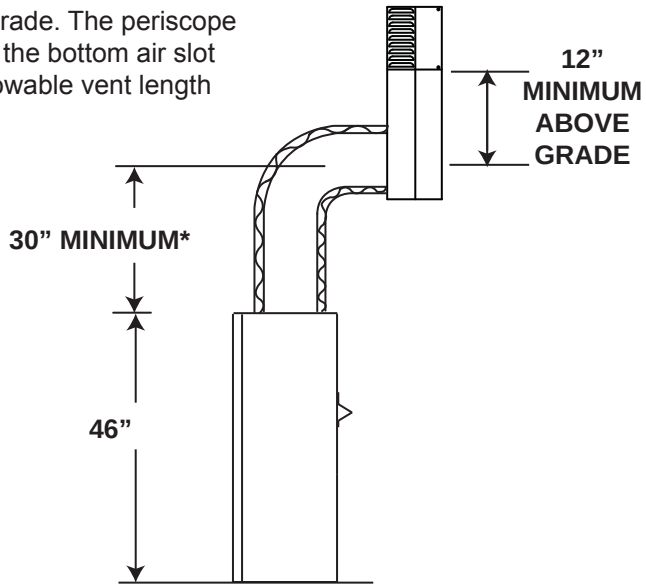

9.3A

*** First two feet requires insulation sleeve**

3.4 MINIMUM AIR TERMINAL LOCATION CLEARANCES

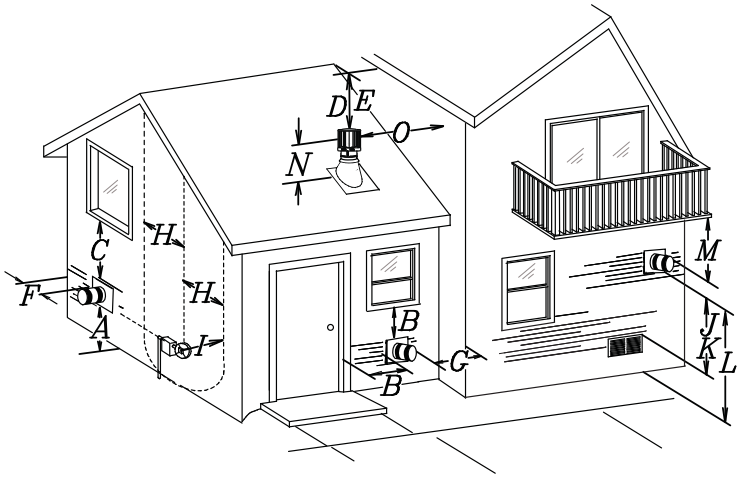

COVERED BALCONY APPLICATIONS

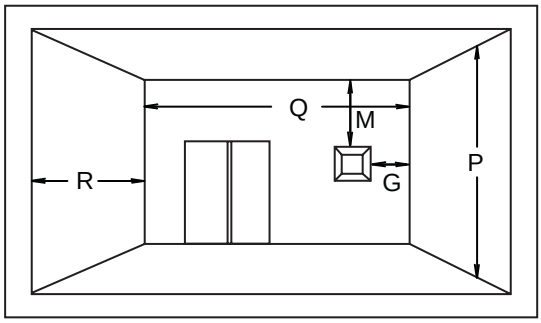

Q_{MIN}	= 3 feet
R_{MAX}	= 2 x Q_{ACTUAL}
R_{MAX}	≤ 15 feet

	INSTALLATIONS		
	CANADA	U.S.A.	
A	12”	12”	Clearance above grade, veranda porch, deck or balcony.
B	12” Δ	9” Δ	Clearance to windows or doors that open.
C	12” *	12” *	Clearance to permanently closed windows.
D	18” **	18” **	Vertical clearance to ventilated soffits located above the terminal within a horizontal distance of 2’ from the centerline of the terminal.
E	12” **	12” **	Clearance to unventilated soffit.
F	0”	0”	Clearance to an outside corner wall.
G	0” ***	0” ***	Clearance to an inside **non**-combustible corner wall or protruding **non**-combustible obstructions (chimney, etc.).
	2” ***	2” ***	Clearance to an inside combustible corner wall or protruding combustible obstructions (vent chase, etc.).
H	3’	3’ ****	Clearance to each side of the centerline extended above the meter / regulator assembly to a maximum vertical distance of 15’.
I	3’	3’ ****	Clearance to a service regulator vent outlet.
J	12”	9”	Clearance to a non-mechanical air supply inlet to the building or a combustion air inlet to any other appliance.
K	6’	3’	Clearance to a mechanical air supply inlet.
L	7’ ‡	7’ ****	Clearance above a paved sidewalk or paved driveway located on public property.
M	12” ††	12” ****	Clearance under a veranda, porch, deck or balcony.
N	16”	16”	Clearance above the roof.
O	2’ †*	2’ †*	Clearance from an adjacent wall including neighbouring buildings.
P	8’	8’	Roof must be **non**-combustible without openings.
Q	3’	3’	See chart for wider wall dimensions.
R	6’	6’	See chart for deeper wall dimensions. The terminal shall not be installed on any wall that has an opening between the terminal and the open side of the structure.

Δ The terminal shall not be located less than 6 feet under a window that opens on a horizontal plane in a structure with three walls and a roof.

* Recommended to prevent condensation on windows and thermal breakage

** It is recommended to maximize the distance to vinyl clad soffits.

*** The periscope requires a minimum 18” clearance from an inside corner.

**** This is a recommended distance. For additional requirements check local codes.

† 3 feet above if within 10 feet horizontally.

‡ A vent shall not terminate where it may cause hazardous frost or ice accumulations on adjacent property surfaces.

†† Permitted only if the veranda, porch, or deck is fully open on a minimum of two sides beneath the floor.

†* Recommended to prevent recirculation of exhaust products. For additional requirements check local codes.

12.3B

3.5 VENTING APPLICATION FLOW CHART

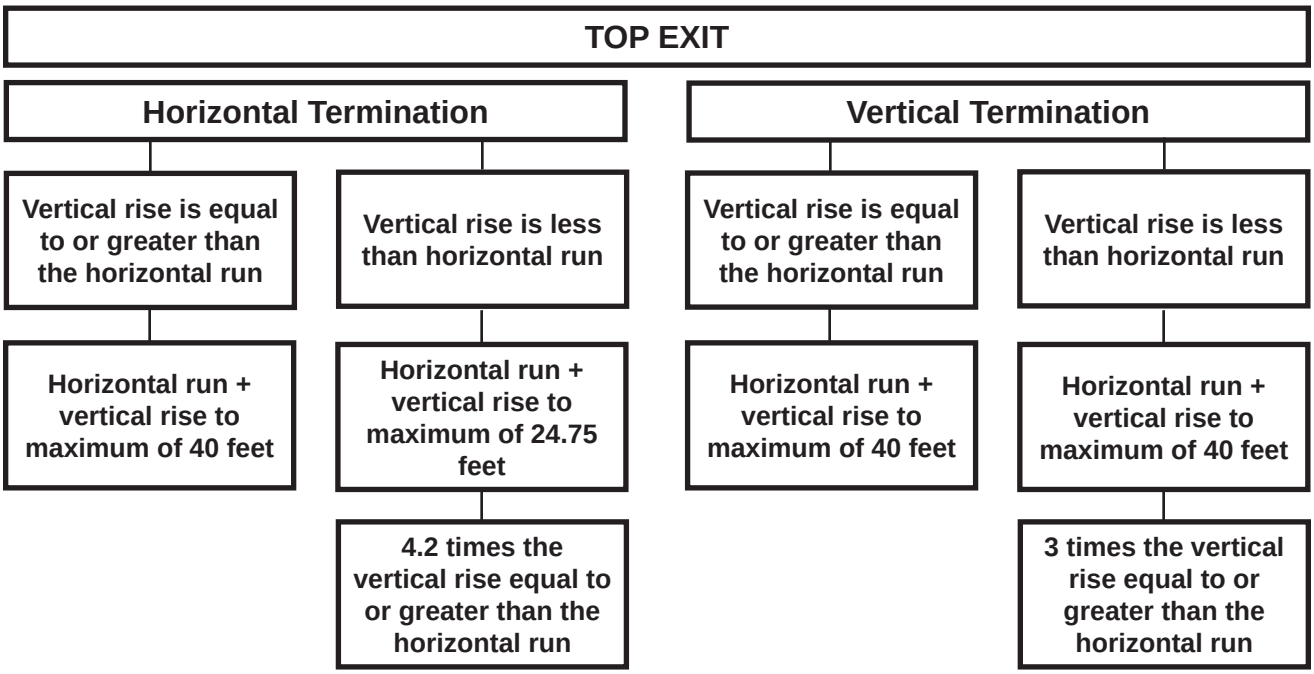

13.1

3.6 DEFINITIONS

For the following symbols used in the venting calculations and examples are:
> - greater than
≥ - equal to or greater than
< - less than
≤ - equal to or less than
H_T - total of both horizontal vent lengths (Hr) and offsets (Ho) in feet
H_R - combined horizontal vent lengths in feet
H_O - offset factor: .03 (total degrees of offset - 90°*) in feet
V_T - combined vertical vent lengths in feet

14.1

3.7 ELBOW VENT LENGTH VALUES

	FEET	INCHES
1°	0.03	0.5
15°	0.45	6.0
30°	0.9	11.0
45°	1.35	16.0
90°*	2.7	32.0

* The first 90° offset has a zero value and is shown in the formula as - 90°

15.1

3.8 HORIZONTAL TERMINATION

$(H_T) \leq (V_T)$

Simple venting configuration (only one 90° elbow)

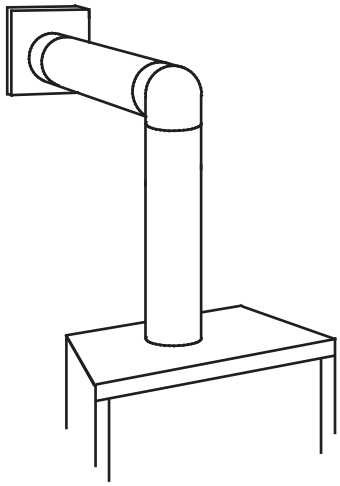

See graph to determine the required vertical rise V_T for the required horizontal run H_T.

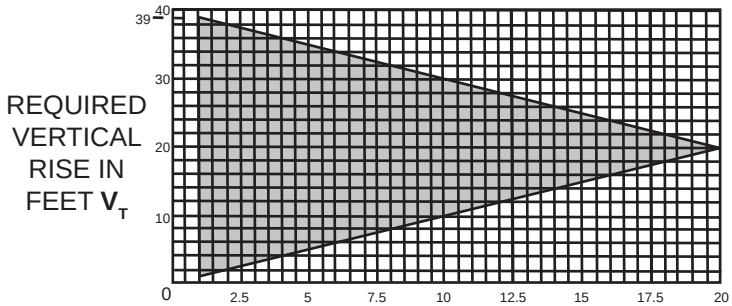

The shaded area within the lines represents acceptable values for H_T and V_T

For vent configurations requiring more than one 90° elbow, the following formulas apply:

Formula 1: $H_T \leq V_T$

Formula 2: $H_T + V_T \leq 40$ feet

Example:

V_1 = 3 FT

V_2 = 8 FT

$V_T = V_1 + V_2$ = 3 FT + 8 FT = 11 FT

H_1 = 2.5 FT

H_2 = 2 FT

$H_R = H_1 + H_2$ = 2.5 + 2 = 4.5 FT

H_O = .03 (three 90° elbows - 90°) = .03 (270° - 90°) = 5.4 FT

$H_T = H_R + H_O$ = 4.5 + 5.4 = 9.9 FT

$H_T + V_T$ = 9.9 + 11 = 20.9 FT

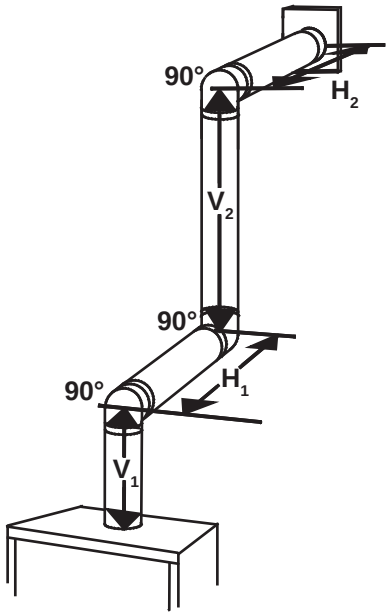

Formula 1: $H_T \leq V_T$

9.9 ≤ 11

Formula 2: $H_T + V_T \leq 40$ **FT**

20.9 ≤ 40

Since both formulas are met, this vent configuration is acceptable.

16.1A

$(H_T) > (V_T)$

Simple venting configuration (only one 90° elbow)

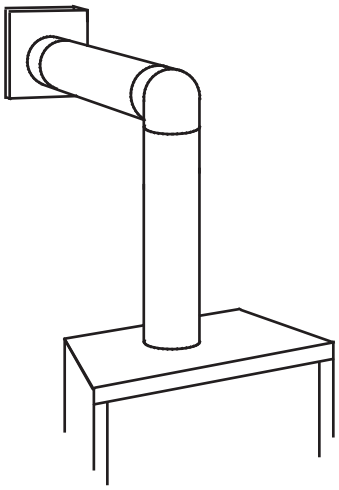

See graph to determine the required vertical rise $\mathbf{V_T}$ for the required horizontal run $\mathbf{H_T}$.

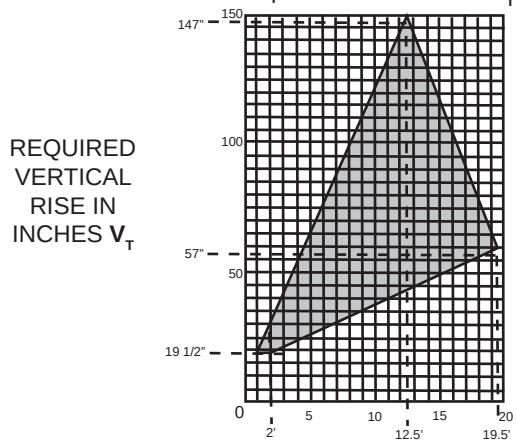

HORIZONTAL VENT RUN PLUS OFFSET IN FEET $\mathbf{H_T}$

The shaded area within the lines represents acceptable values for $\mathbf{H_T}$ and $\mathbf{V_T}$

For vent configurations requiring more than one 90° elbow, the following formulas apply:

Formula 1: $H_T \leq 4.2\ V_T$
Formula 2: $H_T + V_T \leq 24.75$ feet

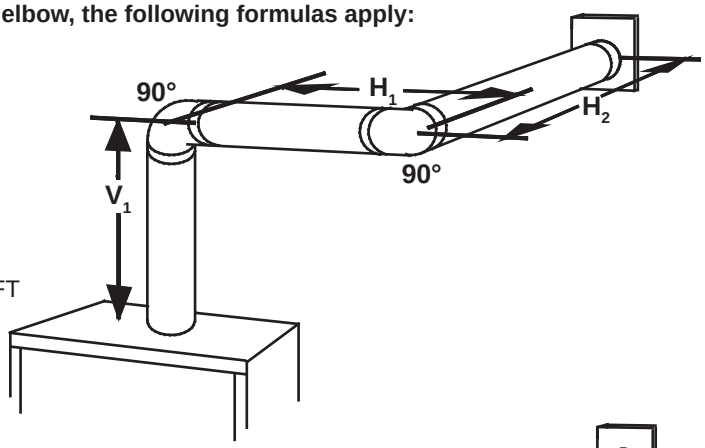

Example:
$V_1 = V_T = 6$ FT
$H_1 = 3$ FT
$H_2 = 5$ FT
$H_R = H_1 + H_2 = 3 + 5 = 8$ FT
$H_O = .03$ (two 90° elbows - 90°) = .03 (180° - 90°) = 2.7 FT
$H_T = H_R + H_O = 8 + 2.7 = 10.7$ FT
$H_T + V_T = 10.7 + 6 = 16.7$ FT

Formula 1: $H_T \leq 4.2\ V_T$
$4.2\ V_T = 4.2 \times 6 = 25.2$ FT
$10.7 \leq 25.2$

Formula 2: $H_T + V_T \leq 24.75$ FT
$16.7 \leq 24.75$

Since both formulas are met, this vent configuration is acceptable.

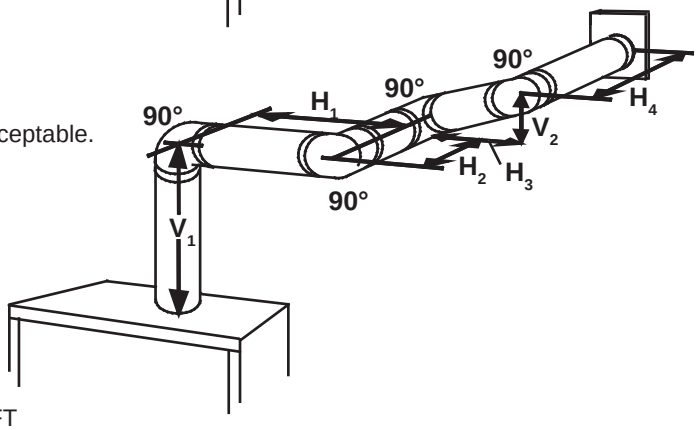

Example:
$V_1 = 4$ FT
$V_2 = 1.5$ FT
$V_T = V_1 + V_2 = 4 + 1.5 = 5.5$ FT
$H_1 = 2$ FT
$H_2 = 1$ FT
$H_3 = 1$ FT
$H_4 = 1.5$ FT
$H_R = H_1 + H_2 + H_3 + H_4 = 2 + 1 + 1 + 1.5 = 5.5$ FT
$H_O = .03$ (four 90° elbows - 90°) = .03 (360° - 90°) = 8.1 FT
$H_T = H_R + H_O = 5.5 + 8.1 = 13.6$ FT
$H_T + V_T = 13.6 + 5.5 = 19.1$ FT

Formula 1: $H_T \leq 4.2\ V_T$
$4.2\ V_T = 4.2 \times 5.5 = 23.1$ FT
$13.6 \leq 23.1$

Formula 2: $H_T + V_T \leq 24.75$ FT
$19.1 \leq 24.75$

Since both formulas are met, this vent configuration is acceptable.

16.1_2

3.9 VERTICAL TERMINATION

$(H_T) \leq (V_T)$

Simple venting configurations.

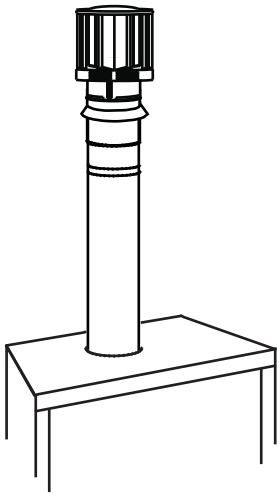

See graph to determine the required vertical rise $\mathbf{V_T}$ for the required horizontal run $\mathbf{H_T}$.

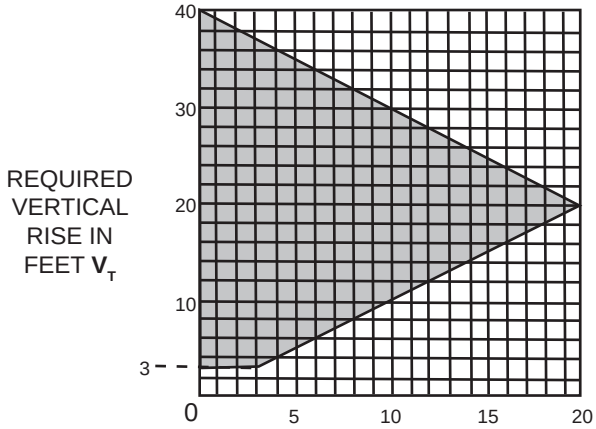

HORIZONTAL VENT RUN PLUS OFFSET IN FEET $\mathbf{H_T}$

The shaded area within the lines represents acceptable values for $\mathbf{H_T}$ and $\mathbf{V_T}$

For vent configurations requiring one or more 90° elbows the following formulas apply:

Formula 1: $\mathbf{H_T \leq V_T}$
Formula 2: $\mathbf{H_T + V_T \leq 40}$ **feet**

Example:
$\mathbf{V_1}$ = 5 FT
$\mathbf{V_2}$ = 6 FT
$\mathbf{V_3}$ = 10 FT
$\mathbf{V_T} = \mathbf{V_1 + V_2 + V_3} = 5 + 6 + 10 = 21$ FT
$\mathbf{H_1}$ = 8 FT
$\mathbf{H_2}$ = 2.5 FT
$\mathbf{H_R} = \mathbf{H_1 + H_2} = 8 + 2.5 = 10.5$ FT
$\mathbf{H_O}$ = .03 (four 90° elbows - 90°)
= .03 (360° - 90°) = 8.1 FT
$\mathbf{H_T} = \mathbf{H_R + H_O} = 10.5 + 8.1 = 18.6$ FT
$\mathbf{H_T + V_T} = 18.6 + 21 = 39.6$ FT

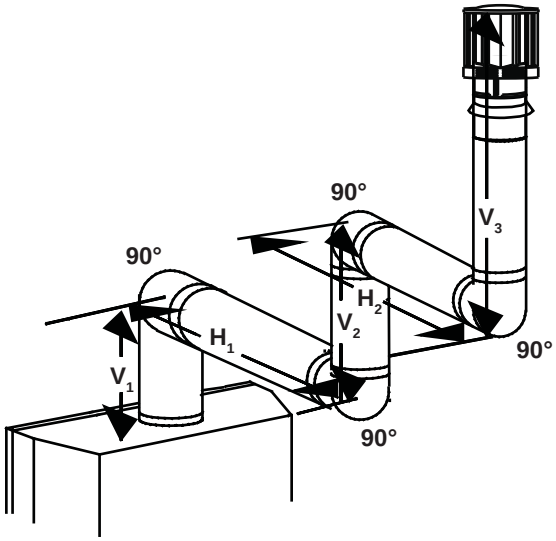

Formula 1: $\mathbf{H_T \leq V_T}$
$18.6 \leq 21$
Formula 2: $\mathbf{H_T + V_T \leq 40}$ **FT**
$39.6 \leq 40$

Since both formulas are met, this vent configuration is acceptable.

18.1

$(H_T) > (V_T)$

Simple venting configurations.

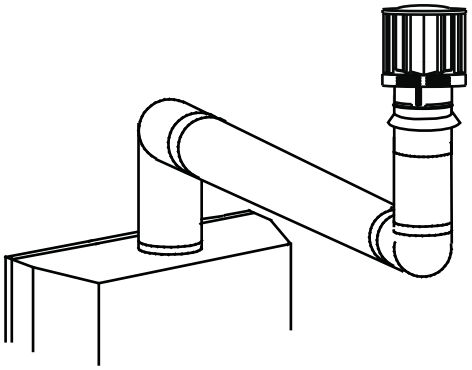

See graph to determine the required vertical rise $\mathbf{V_T}$ for the required horizontal run $\mathbf{H_T}$.

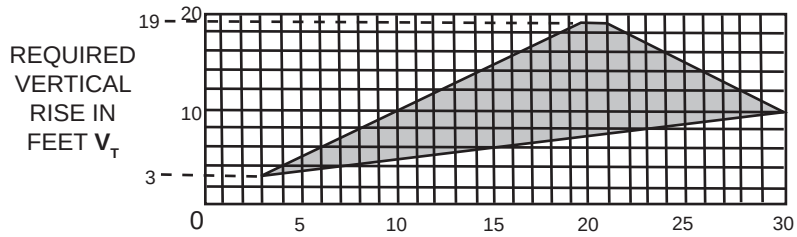

The shaded area within the lines represents acceptable values for $\mathbf{H_T}$ and $\mathbf{V_T}$

For vent configurations requiring more than two 90° elbows the following formulas apply:

Formula 1: $H_T \leq 3V_T$
Formula 2: $H_T + V_T \leq 40$ feet

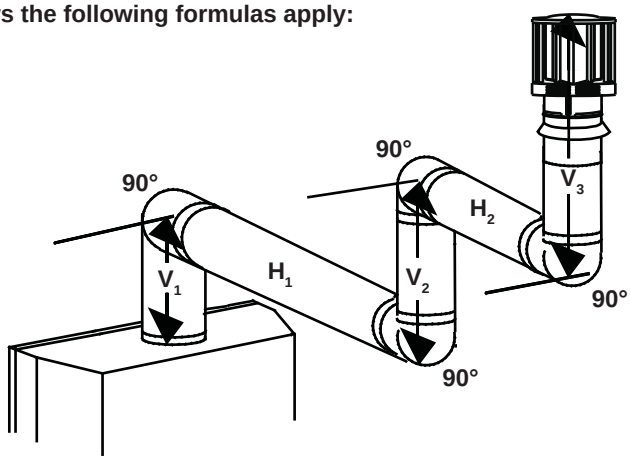

Example:
$\mathbf{V_1}$ = 2 FT
$\mathbf{V_2}$ = 1 FT
$\mathbf{V_3}$ = 1.5 FT
$\mathbf{V_T} = \mathbf{V_1} + \mathbf{V_2} + \mathbf{V_3}$ = 2 + 1 + 1.5 = 4.5 FT
$\mathbf{H_1}$ = 6 FT
$\mathbf{H_2}$ = 2 FT
$\mathbf{H_R} = \mathbf{H_1} + \mathbf{H_2}$ = 6 + 2 = 8 FT
$\mathbf{H_O}$ = .03 (four 90° elbows - 90°)
= .03 (360° - 90°) = 8.1 FT
$\mathbf{H_T} = \mathbf{H_R} + \mathbf{H_O}$ = 8 + 8.1 = 16.1 FT
$\mathbf{H_T} + \mathbf{V_T}$ = 16.1 + 4.5 = 20.6 FT

Formula 1: $\mathbf{H_T \leq 3V_T}$
$\mathbf{3V_T}$ = 3 x 4.5 = 13.5 FT
16.1 > 13.5

Since this formula is not met, this vent configuration is **<u>un</u>acceptable.**

Formula 2: $\mathbf{H_T + V_T \leq 40}$ **feet**
20.6 ≤ 40

Since only formula 2 is met, this vent configuration is unacceptable and a new fireplace location or vent configuration will need to be established to satisfy both formulas.

18.1_2A

4.0 INSTALLATION

⚠ WARNING

FOR SAFE AND PROPER OPERATION OF THE APPLIANCE, FOLLOW THE VENTING INSTRUCTIONS EXACTLY.

ALL INNER EXHAUST AND OUTER INTAKE VENT PIPE JOINTS MAY BE SEALED USING EITHER RED RTV HIGH TEMP SILICONE SEALANT W573-0002 (NOT SUPPLIED) OR BLACK HIGH TEMP MILL PAC W573-0007 (NOT SUPPLIED) WITH THE EXCEPTION OF THE APPLIANCE EXHAUST FLUE COLLAR WHICH MUST BE SEALED USING MILL PAC.

IF USING PIPE CLAMPS TO CONNECT VENT COMPONENTS, 3 SCREWS MUST ALSO BE USED TO ENSURE THE CONNECTION CANNOT SLIP OFF.

DO NOT CLAMP THE FLEXIBLE VENT PIPE.

RISK OF FIRE, EXPLOSION OR ASPHYXIATION. IMPROPER SUPPORT OF THE ENTIRE VENTING SYSTEM MAY ALLOW VENT TO SAG AND SEPARATE. USE VENT RUN SUPPORTS AND CONNECT VENT SECTIONS PER INSTALLATION INSTRUCTIONS.

RISK OF FIRE, DO NOT ALLOW LOOSE MATERIALS OR INSULATION TO TOUCH THE VENT PIPE. REMOVE INSULATION TO ALLOW FOR THE INSTALLATION OF THE ATTIC SHIELD AND TO MAINTAIN CLEARANCES TO COMBUSTIBLES.

68.2A

4.1 WALL AND CEILING PROTECTION

⚠ WARNING

DO NOT FILL THE SPACE BETWEEN THE VENT PIPE AND ENCLOSURE WITH ANY TYPE OF MATERIAL. DO NOT PACK INSULATION OR COMBUSTIBLES BETWEEN CEILING FIRESTOPS. ALWAYS MAINTAIN SPECIFIED CLEARANCES AROUND VENTING AND FIRESTOP SYSTEMS. INSTALL WALL SHIELDS AND FIRESTOPS AS SPECIFIED. FAILURE TO KEEP INSULATION OR OTHER MATERIALS AWAY FROM VENT PIPE MAY CAUSE FIRE.

70.1

Horizontal runs may have a 0” rise per foot in all cases using Wolf Steel, Simpson Dura-Vent, Selkirk Direct Temp or American Metal Amerivent rigid vent components and Wolf Steel flexible vent components. For optimum performance it is recommended that all horizontal runs have a minimum 1/4” rise per foot using flexible or rigid venting. For safe and proper operation of the appliance, follow the venting instructions exactly.

4.1.1 HORIZONTAL INSTALLATION

⚠ WARNING

THE FIRESTOP ASSEMBLY MUST BE INSTALLED WITH THE VENT SHIELD TO THE TOP.

TERMINALS MUST NOT BE RECESSED INTO A WALL OR SIDING MORE THAN THE DEPTH OF THE RETURN FLANGE OF THE MOUNTING PLATE.

This application occurs when venting through an exterior wall. Having determined the correct height for the air terminal location, cut and frame a hole in the exterior wall as illustrated to accommodate the firestop assembly. Dry fit the firestop assembly before proceeding to ensure the brackets on the rear surface fit to the inside surface of the horizontal framing.

The length of the vent shield may be cut shorter for combustible walls that are less than 8 1/2” thick but the vent shield must extend the full depth of the combustible wall.

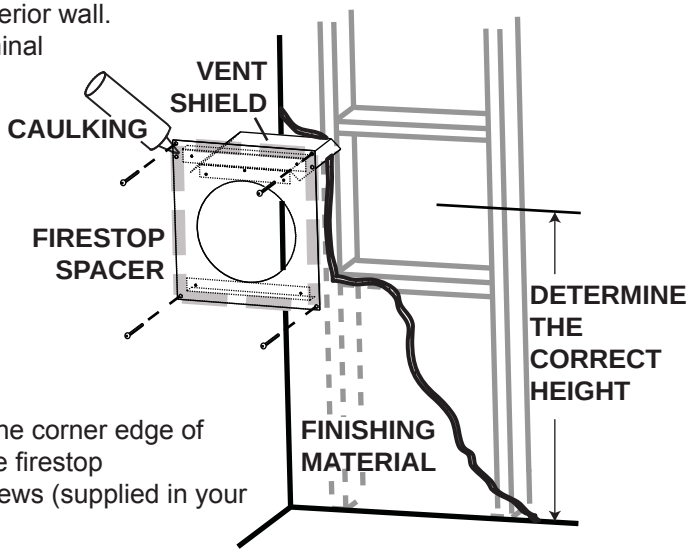

A. Apply a bead of caulking (not supplied) around the corner edge of the inside surface of the firestop assembly, fit the firestop assembly to the hole and secure using the 4 screws (supplied in your manual baggie).

B. Once the vent pipe is installed in its final position, apply high temperature sealant W573-0007 (not supplied) between the pipe and the firestop.

20.2

4.1.2 VERTICAL INSTALLATION

This application occurs when venting through a roof. Installation kits for various roof pitches are available from your authorized dealer / distributor. See accessories to order specific kits required.

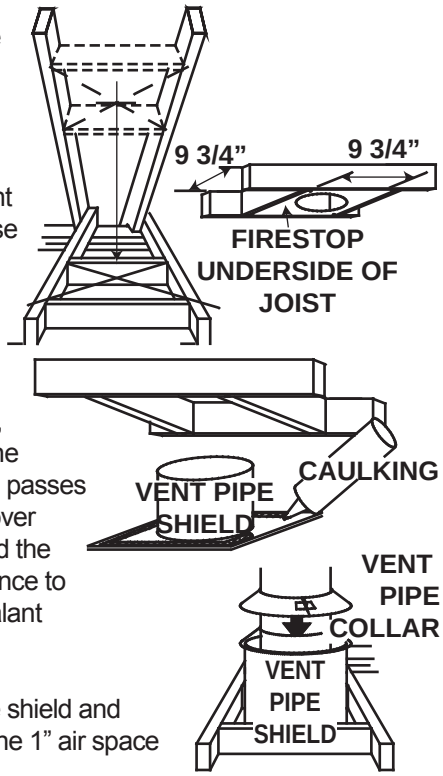

A. Determine the air terminal location, cut and frame a square opening as illustrated in the ceiling and the roof to provide the minimum 1“ clearance between the vent pipe and any combustible material. Try to center the vent pipe location midway between two joists to prevent having to cut them. Use a plumb bob to line up the center of the openings. A vent pipe shield will prevent any materials such as insulation, from filling up the 1” air space around the pipe. Nail headers between the joist for extra support.

B. Apply a bead of caulking (not supplied) to the framework or to the Wolf Steel vent pipe shield plate or equivalent (in the case of a finished ceiling), and secure over the opening in the ceiling. A firestop must be placed on the bottom of each framed opening in a roof or ceiling that the venting system passes through. Apply a bead of caulking all around and place a firestop spacer over the vent shield to restrict cold air from being drawn into the room or around the fireplace. Ensure that both spacer and shield maintain the required clearance to combustibles. Once the vent pipe is installed in its final position, apply sealant between the pipe and the firestop assembly.

C. In the attic, slide the vent pipe collar down to cover up the open end of the shield and tighten. This will prevent any materials, such as insulation, from filling up the 1” air space around the pipe.

21.1

4.2 USING FLEXIBLE VENTING COMPONENTS

⚠ WARNING

DO NOT ALLOW THE INNER FLEX PIPE TO BUNCH UP ON HORIZONTAL OR VERTICAL RUNS AND ELBOWS. KEEP IT PULLED TIGHT.

SPACERS ARE ATTACHED TO THE INNER FLEX PIPE AT PREDETERMINED INTERVALS TO MAINTAIN AN EVEN AIR GAP TO THE OUTER FLEX PIPE. THIS GAP IS REQUIRED FOR SAFE OPERATION. A SPACER IS REQUIRED AT THE START, MIDDLE AND END OF EACH ELBOW TO ENSURE THIS GAP IS MAINTAINED. THESE SPACERS MUST NOT BE REMOVED.

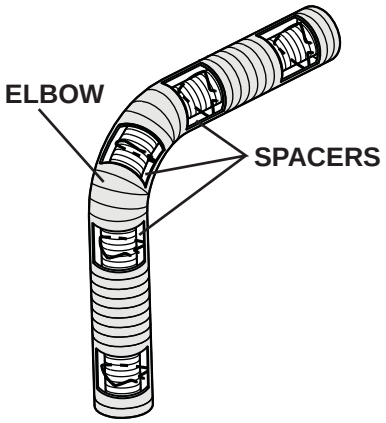

For safe and proper operation of the appliance, follow the venting instructions exactly.
All inner flex pipe and outer flex pipe joints may be sealed using high temperature sealant W573-0002 (not supplied) or the high temperature sealant W573-0007 Mill Pac (not supplied). However, the high temperature sealant W573-0007 Mill Pac (not supplied) must be used on the joint connecting the inner flex pipe and the exhaust flue collar.
Use only approved flexible vent pipe kits marked:

"Wolf Steel Approved Venting" as identified by the stamp only on the outer flex pipe.

22.1

4.2.1 HORIZONTAL AIR TERMINAL INSTALLATION

A. Stretch the inner flex pipe to the required length taking into account the additional length needed for the finished wall surface. Slip the vent pipe a minimum of 2" over the inner sleeve of the air terminal and secure with 3 #8 screws. Apply a heavy bead of the high temperature sealant W573-0007 Mill Pac (not supplied).

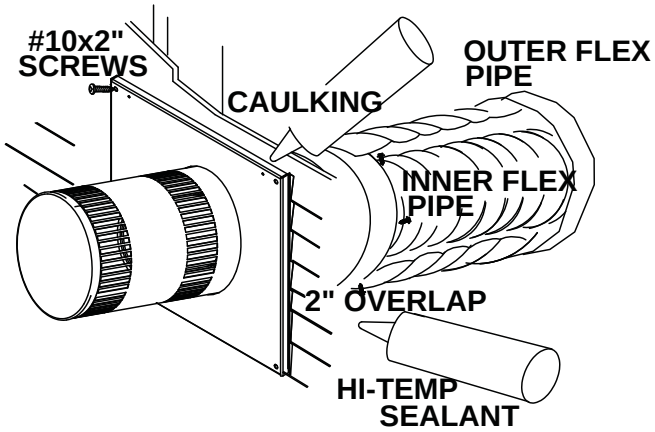

B. Using the outer flex pipe, slide over the outer combustion air sleeve of the air terminal and secure with 3 #8 screws. Seal using high temperature sealant W573-0002 (not supplied).

C. Insert the vent pipes through the firestop maintaining the required clearance to combustibles. Holding the air terminal (lettering in an upright, readable position), secure to the exterior wall and make weather tight by sealing with caulking (not supplied).

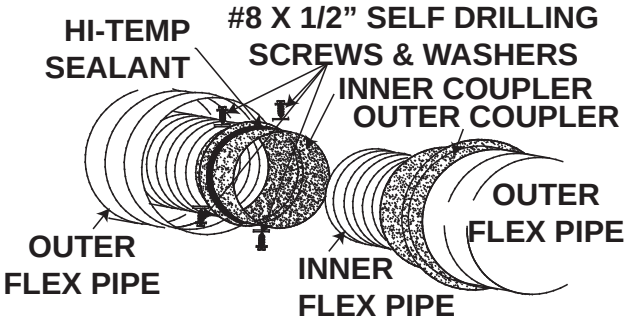

D. If more vent pipe needs to be used to reach the fireplace, couple them together as illustrated. The vent system must be supported approximately every 3 feet for both vertical and horizontal runs. Use noncombustible strapping to maintain the minimum 1" clearance to combustibles.

The air terminal mounting plate may be recessed into the exterior wall or siding no greater than the depth of its return flange.

23.3

4.2.2 VERTICAL AIR TERMINAL INSTALLATION

⚠ WARNING

MAINTAIN A MINIMUM 2” SPACE BETWEEN THE AIR INLET BASE AND THE STORM COLLAR.

A. Fasten the roof support to the roof using the screws provided. The roof support is optional. In this case the venting is to be adequately supported using either an alternate method suitable to the authority having jurisdiction or the optional roof support.

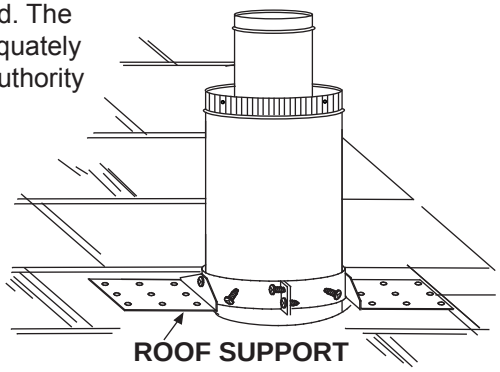

B. Stretch the inner flex pipe to the required length. Slip the inner flex pipe a minimum of 2” over the inner pipe of the air terminal connector and secure with 3 #8 screws. Seal using a heavy bead of high temperature sealant W573-0007 (not supplied).

C. Repeat using the outer flex pipe, using a heavy bead of high temperature sealant W573-0002 (not supplied).

D. Thread the air terminal connector / vent pipe assembly down through the roof. The air terminal must be positioned vertically and plumb. Attach the air terminal connector to the roof support, ensuring that the top of the air terminal is 16” above the highest point that it penetrates the roof.

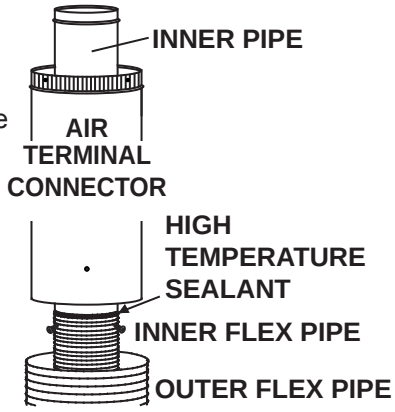

E. Remove nails from the shingles, above and to the sides of the air terminal connector. Place the flashing over the air terminal connector leaving a min. 3/4” of the air terminal connector showing above the top of the flashing. Slide the flashing underneath the sides and upper edge of the shingles. Ensure that the air terminal connector is properly centred within the flashing, giving a 3/4” margin all around. Fasten to the roof. Do not nail through the lower portion of the flashing. Make weather-tight by sealing with caulking. Where possible, cover the sides and top edges of the flashing with roofing material.

F. Aligning the seams of the terminal and air terminal connector, place the terminal over the air terminal connector making sure the vent pipe goes into the hole in the terminal. Secure with the three screws provided.

G. Apply a heavy bead of weatherproof caulking 2” above the flashing. Install the storm collar around the air terminal and slide down to the caulking. Tighten to ensure that a weather-tight seal between the air terminal and the collar is achieved.

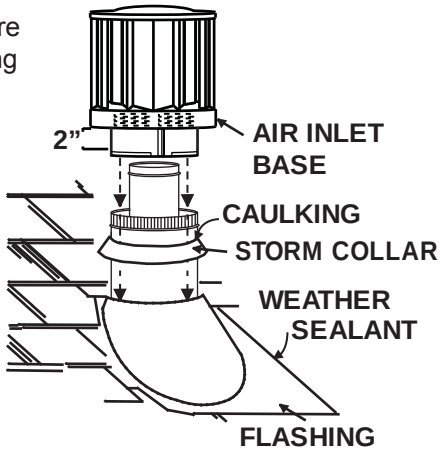

H. If more vent pipe needs to be used to reach the appliance see “HORIZONTAL AIR TERMINAL INSTALLATION” section.

24.1

4.2.3 APPLIANCE VENT CONNECTION

A. Install the inner flex pipe to the appliance. Secure with 3 screws and flat washers. Seal the joint and screw holes using the high temperature sealant W573-0007 (not supplied).

B. Install the outer flex pipe to the appliance. Attach and seal the joints using the high temperature sealant W573-0002 (not supplied).

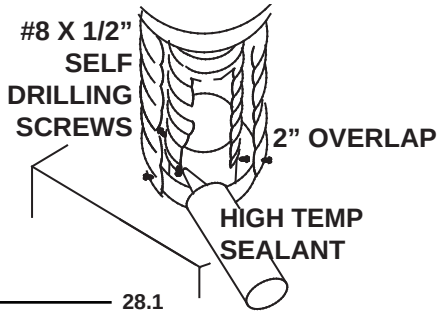

28.1

4.3 USING RIGID VENT COMPONENTS

The vent system must be supported approximately every 3 feet for both vertical and horizontal runs. Use Wolf Steel Ltd. support ring assembly or equivalent noncombustible strapping to maintain the minimum clearance to combustibles for both vertical and horizontal runs.

All inner exhaust and outer intake vent pipe joints may be sealed using either red high temperature silicone sealant W573-0002 (not supplied) or black high temperature sealant W573-0007 Mill Pac (not supplied) with the exception of the appliance exhaust flue collar which must be sealed using Mill Pac.

25.1

4.3.1 HORIZONTAL AIR TERMINAL INSTALLATION

A. Move the fireplace into position. Measure the vent length required between terminal and fireplace taking into account the additional length needed for the finished wall surface and any 1¼" overlaps between venting components.

B. Apply high temperature sealant W573-0007 (not supplied) to the outer edge of the inner collar of the fireplace. Attach the first inner rigid pipe component and secure using 3 self tapping screws. Repeat using the outer rigid pipe.

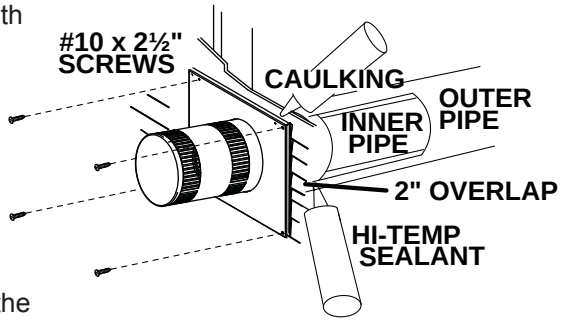

C. Insert the vent pipes through the firestop maintaining the required clearance to combustibles. Holding the air terminal (lettering in an upright, readable position), secure to the exterior wall and make weather tight by sealing with caulking (not supplied).

The air terminal mounting plate may be recessed into the exterior wall or siding no greater than the depth of its return flange.

26.2

4.3.2 EXTENDED HORIZONTAL AIR TERMINAL INSTALLATION

A. Follow the instructions for "HORIZONTAL AIR TERMINAL INSTALLATIONS" section.

B. Continue adding components alternating inner rigid pipe and outer rigid pipe. Ensure that all inner rigid pipe and elbows have sufficient vent spacers attached and each component is sealed and securely fastened to the one prior. Attach the inner telescopic sleeve to the vent run. Repeat using the outer telescopic sleeve. Seal and secure as before. To facilitate completion, attach inner and outer couplers to the air terminal.

C. Install the air terminal. See "HORIZONTAL AIR TERMINAL INSTALLATION" section.

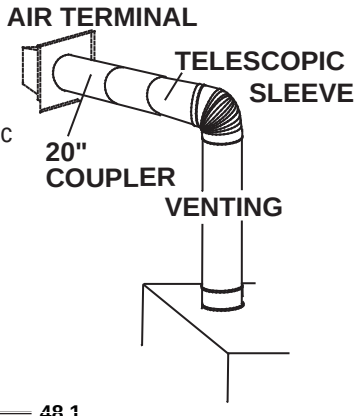

48.1

4.3.3 VERTICAL AIR TERMINAL INSTALLATION

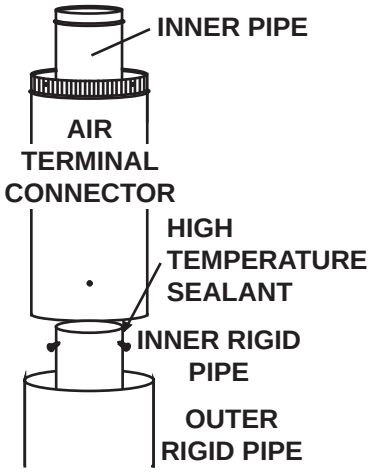

A. Move the appliance into position.

B. Fasten the roof support to the roof using the screws provided. The roof support is optional. In this case the venting is to be adequately supported using either an alternate method suitable to the authority having jurisdiction or the optional roof support.

C. Apply high temperature sealant W573-0007 (not supplied) to the outer edge of the inner sleeve of the air terminal. Slip the inner coupler a minimum of 2” over the sleeve and secure using 3 screws.

D. Apply high temperature sealant W573-0002 (not supplied) to the outer edge of the of the outside sleeve of the air terminal connector. Slip the outer coupler over the sleeve and secure as before. Trim the outer coupler even with the inner coupler end.

E. Thread the air terminal connector / vent pipe assembly down through the roof support and attach, ensuring that a minimum 16” of air terminal connector will penetrate the roof when fastened. If the attic space is tight, we recommend threading the Wolf Steel vent pipe collar or equivalent loosely onto the air terminal connector / vent pipe assembly as it is passed through the attic. The air terminal connector must be located vertically and plumb.

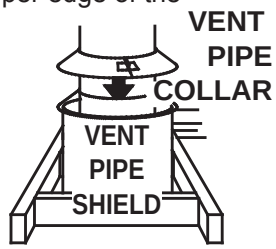

F. Remove nails from the shingles, above and to the sides of the air terminal connector. Place the flashing over the air terminal connector and slide it underneath the sides and upper edge of the shingles. Ensure that the air terminal connector is properly centered within the flashing, giving a 3/4” margin all around. Fasten to the roof. Do NOT nail through the lower portion of the flashing. Make weather-tight by sealing with caulking. Where possible, cover the sides and top edges of the flashing with roofing material.

G. Apply a heavy bead of waterproof caulking 2” above the flashing. Install the storm collar around the air terminal and slide down to the caulking. Tighten to ensure that a weather-tight seal between the air terminal connector and the collar is achieved.

H. Continue adding rigid venting sections, sealing and securing as above. Attach the inner collapsed telescopic sleeve to the last section of rigid piping. Secure with screws and seal. Repeat using the outer telescopic sleeve.

I. Run a bead of high temperature sealant W573-0007 (not supplied) around the outside of the inner collar on the appliance. Pull the telescopic sleeve a minimum of 2” onto the collar. Secure with 3 screws. Repeat with the outer telescopic sleeve.

J. In the attic, slide the vent pipe collar down to cover up the open end of the shield and tighten. This will prevent any materials, such as insulation, from filling up the 1” air space around the pipe.

27.2

4.4 GAS INSTALLATION

⚠ WARNING
RISK OF FIRE, EXPLOSION OR ASPHYXIATION. ENSURE THERE ARE NO IGNITION SOURCES SUCH AS SPARKS OR OPEN FLAMES.
SUPPORT GAS CONTROL WHEN ATTACHING GAS SUPPLY PIPE TO PREVENT DAMAGING GAS LINE.
ALWAYS LIGHT THE PILOT WHETHER FOR THE FIRST TIME OR IF THE GAS SUPPLY HAS RUN OUT WITH THE GLASS DOOR OPENED OR REMOVED. PURGING OF THE GAS SUPPLY LINE SHOULD BE PERFORMED BY A QUALIFIED SERVICE TECHNICIAN. ASSURE THAT A CONTINUOUS GAS FLOW IS AT THE BURNER BEFORE CLOSING THE DOOR. ENSURE ADEQUATE VENTILATION. FOR GAS AND ELECTRICAL LOCATIONS, SEE "DIMENSION" SECTION.
ALL GAS CONNECTIONS MUST BE CONTAINED WITHIN THE APPLIANCE WHEN COMPLETE.
HIGH PRESSURE WILL DAMAGE VALVE. DISCONNECT GAS SUPPLY PIPING BEFORE TESTING GAS LINE AT TEST PRESSURES ABOVE 1/2 PSIG.
VALVE SETTINGS HAVE BEEN FACTORY SET, DO NOT CHANGE.

Installation and servicing to be done by a qualified installer. **Do not use open flame.**

A. Move the appliance into position and secure.

B. If equipped with a flex connector the appliance is designed to accept a 1/2" gas supply. Without the connector it is designed to accept a 3/8" gas supply. The appliance is equipped with a manual shut off valve to turn off the gas supply to the appliance.

C. Connect the gas supply in accordance to local codes. In the absence of local codes, install to the current CAN/CSA-B149.1 Installation Code in Canada or to the current National Fuel Gas Code, ANSI Z223.1 / NFPA 54 in the United States.

D. When flexing any gas line, support the gas valve so that the lines are not bent or kinked.

E. The gas line flex-connector should be installed to provide sufficient movement for shifting the burner assembly on it's side to aid with servicing components.

F. Check for gas leaks by brushing on a soap and water solution.

30.1A

4.5 MOBILE HOME INSTALLATION

This appliance is certified to be installed as an OEM (Original Equipment Manufacturer) installation in a manufactured home or mobile home and must be installed in accordance with the manufacturer's instructions and the Manufactured Home Construction and Safety Standard, Title 24 CFR, Part 3280, in the United States or the Mobile Home Standard, CAN/CSA Z240 MH Series, in Canada. This appliance is only for use with the type(s) of gas indicated on the rating plate. A conversion kit is supplied with the mobile home appliance.

This Mobile/Manufactured Home Listed appliance comes factory equipped with a means to secure the unit. Built in appliances are equipped with 1/4" diameter holes located in the front left and right corners of the base. Use #10 hex head screws, inserted through the holes in the base to secure. For free standing products contact your local authorized dealer / distributor for the appropriate securing kit. For mobile home installations, the appliance must be fastened in place. It is recommended that the appliance be secured in all installations. Always turn off the pilot and the fuel supply at the source, prior to moving the mobile home. After moving the mobile home and prior to lighting the appliance, ensure that the logs are positioned correctly.

This appliance is certified to be installed in an aftermarket permanently located, manufactured (mobile) home, where not prohibited by local codes.
This appliance is only for use with the type of gas indicated on the rating plate. This appliance is not convertible for use with other gases, unless a certified kit is used.

Conversion Kits
This appliance is field convertible between Natural Gas (NG) and Propane (LP).
To convert from one gas to another consult your Authorized dealer/distributor.

29.1

5.0 FRAMING

⚠ WARNING

RISK OF FIRE!

IN ORDER TO AVOID THE POSSIBILITY OF EXPOSED INSULATION OR VAPOUR BARRIER COMING IN CONTACT WITH THE APPLIANCE BODY, IT IS RECOMMENDED THAT THE WALLS OF THE APPLIANCE ENCLOSURE BE “FINISHED” (IE: DRYWALL / SHEETROCK), AS YOU WOULD FINISH ANY OTHER OUTSIDE WALL OF A HOME. THIS WILL ENSURE THAT CLEARANCE TO COMBUSTIBLES IS MAINTAINED WITHIN THE CAVITY.

DO NOT NOTCH THE FRAMING AROUND THE APPLIANCE STAND-OFFS. FAILURE TO MAINTAIN AIR SPACE CLEARANCE MAY CAUSE OVER HEATING AND FIRE. PREVENT CONTACT WITH SAGGING OR LOOSE INSULATION OR FRAMING AND OTHER COMBUSTIBLE MATERIALS. BLOCK OPENING INTO THE CHASE TO PREVENT ENTRY OF BLOWN-IN INSULATION. MAKE SURE INSULATION AND OTHER MATERIALS ARE SECURED.

WHEN CONSTRUCTING THE ENCLOSURE ALLOW FOR FINISHING MATERIAL THICKNESS TO MAINTAIN CLEARANCES. FRAMING OR FINISHING MATERIAL CLOSER THAN THE MINIMUMS LISTED MUST BE CONSTRUCTED ENTIRELY OF NON-COMBUSTIBLE MATERIALS. MATERIALS CONSISTING ENTIRELY OF STEEL, IRON, BRICK, TILE, CONCRETE, SLATE, GLASS OR PLASTERS, OR ANY COMBINATION THEREOF ARE SUITABLE. MATERIALS THAT ARE REPORTED AS PASSING ASTM E 136, STANDARD TEST METHOD FOR BEHAVIOUR OF MATERIALS IN A VERTICAL TUBE FURNACE AT 750°C AND UL763 SHALL BE CONSIDERED NON-COMBUSTIBLE MATERIALS.

MINIMUM CLEARANCE TO COMBUSTIBLES MUST BE MAINTAINED OR A SERIOUS FIRE HAZARD COULD RESULT.

THE APPLIANCE REQUIRES A MINIMUM ENCLOSURE HEIGHT. MEASURE FROM THE APPLIANCE BASE.

IF STEEL STUD FRAMING KITS WITH CEMENT BOARD ARE PROVIDED, THEY MUST BE INSTALLED.

71.1

It is best to frame your appliance after it is positioned and the vent system is installed. Use 2x4’s and frame to local building codes.

For convenience, the standoffs have been shipped flat. Before framing, ensure the standoffs are opened and screwed in place. It is not necessary to install a hearth extension, but the appliance should be raised to be flush with either the hearth or the finished floor.

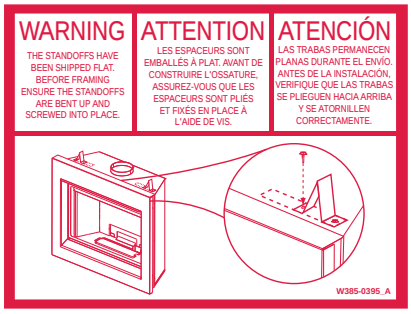

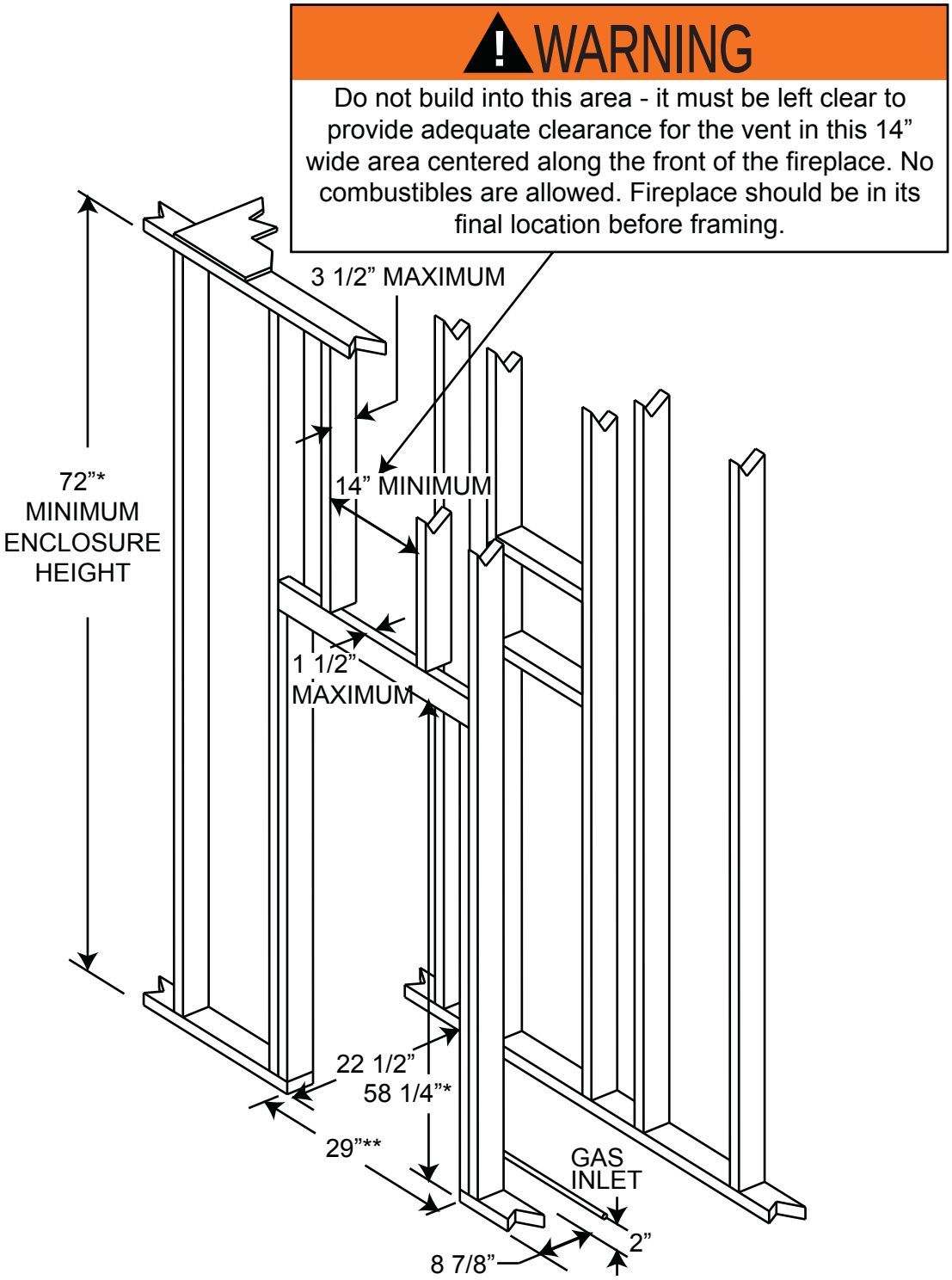

* Allow for finished floor and hearth thickness when setting these dimensions
** When constructing the enclosure allow for finishing material thickness to maintain clearances.

5.1 MINIMUM CLEARANCE TO COMBUSTIBLES

Maintain these minimum clearances to combustibles from appliance and vent surfaces
Non-combustible appliance finishing:
- 4” from the sides of the appliance opening
- 22 3/8” to the top of the appliance opening

Combustible appliance finishing:
- 0” to rear
- 2” all around the vent pipe*
- 22 1/2” recessed depth
- 64” from the bottom of the appliance to the ceiling
- 72” from bottom of appliance to the enclosure top

***HORIZONTAL VENT SECTIONS:** A minimum clearance of 2” all around the vent pipe on all horizontal runs to combustibles is required. Use firestop spacer W010-1799 (supplied).

***VERTICAL VENT SECTIONS:** A minimum of 1” all around the vent pipe on all vertical runs to combustibles is required except for clearances in appliance enclosures. Use firestop spacer W500-0096 (not supplied).

⚠ WARNING

MINIMUM CLEARANCE TO COMBUSTIBLES MUST BE MAINTAINED OR A SERIOUS FIRE HAZARD COULD RESULT.

WHEN CONSTRUCTING THE ENCLOSURE ALLOW FOR FINISHING MATERIAL THICKNESS TO MAINTAIN CLEARANCES. FRAMING OR FINISHING MATERIAL CLOSER THAN THE MINIMUMS LISTED MUST BE CONSTRUCTED ENTIRELY OF NON-COMBUSTIBLE MATERIALS. MATERIALS CONSISTING ENTIRELY OF STEEL, IRON, BRICK, TILE, CONCRETE, SLATE, GLASS OR PLASTERS, OR ANY COMBINATION THEREOF ARE SUITABLE. MATERIALS THAT ARE REPORTED AS PASSING ASTM E 136, STANDARD TEST METHOD FOR BEHAVIOUR OF MATERIALS IN A VERTICAL TUBE FURNACE AT 750°C AND UL763 SHALL BE CONSIDERED NON-COMBUSTIBLE MATERIALS.

NEVER OBSTRUCT THE FRONT OPENING OF THE Appliance.

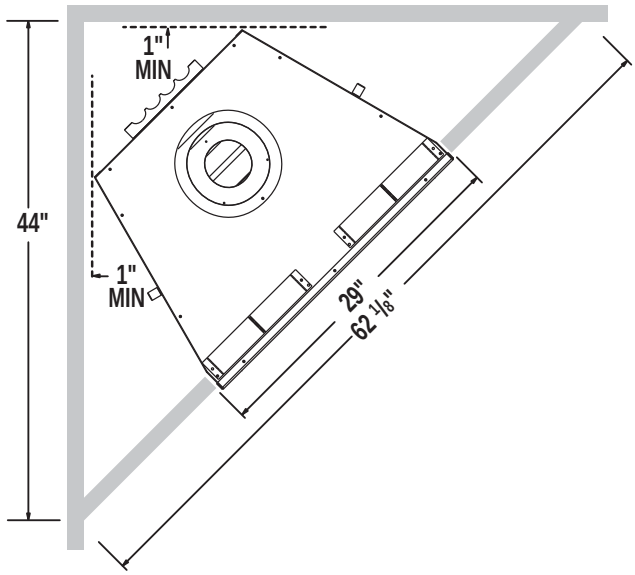

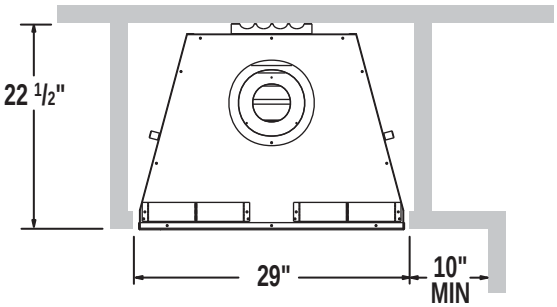

5.2 MINIMUM CLEARANCE TO COMBUSTIBLE ENCLOSURES

⚠ WARNING
RISK OF FIRE!
THE FRONT OF THE Appliance MUST BE FINISHED WITH ANY NON-COMBUSTIBLE MATERIALS SUCH AS BRICK, MARBLE, GRANITE, ETC., AS LONG AS THE FINISHING MATERIAL DOES NOT GO BELOW THE SPECIFIED DIMENSION AS ILLUSTRATED. AS AN ALTERNATIVE, YOU CAN FINISH THE Appliance WITH DRYWALL, SEE DIAGRAM BELOW FOR DETAILS.
FACING AND / OR FINISHING MATERIAL MUST NEVER OVERHANG INTO THE Appliance OPENING.
THE Appliance REQUIRES A MINIMUM ENCLOSURE HEIGHT MEASURED FROM THE Appliance BASE.

<u>IMPORTANT:</u> The GD82 requires a minimum inside enclosure height of 72”, measured from the bottom of the appliance. For temperature requirements, this area must be left unobstructed.

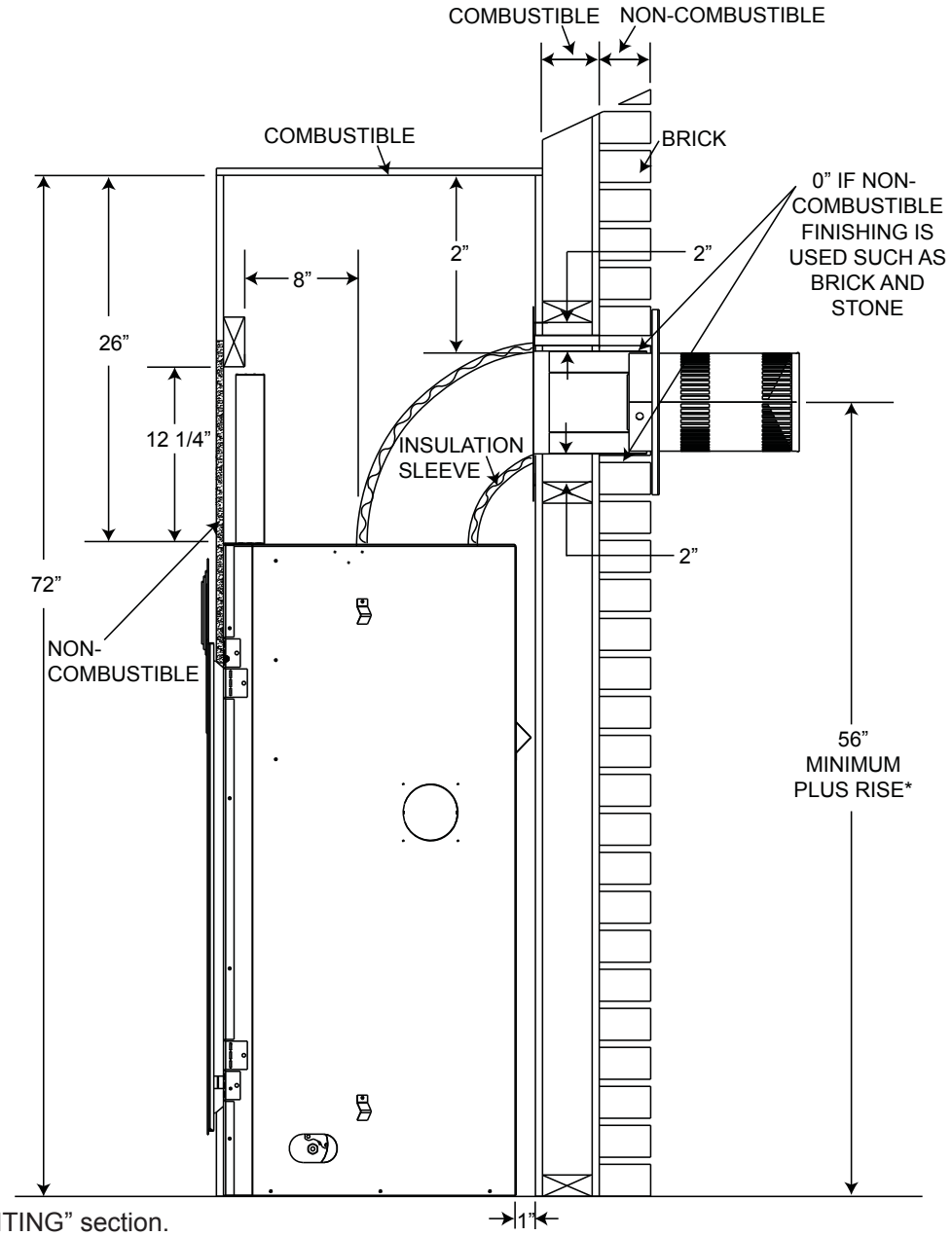

* See “VENTING” section.

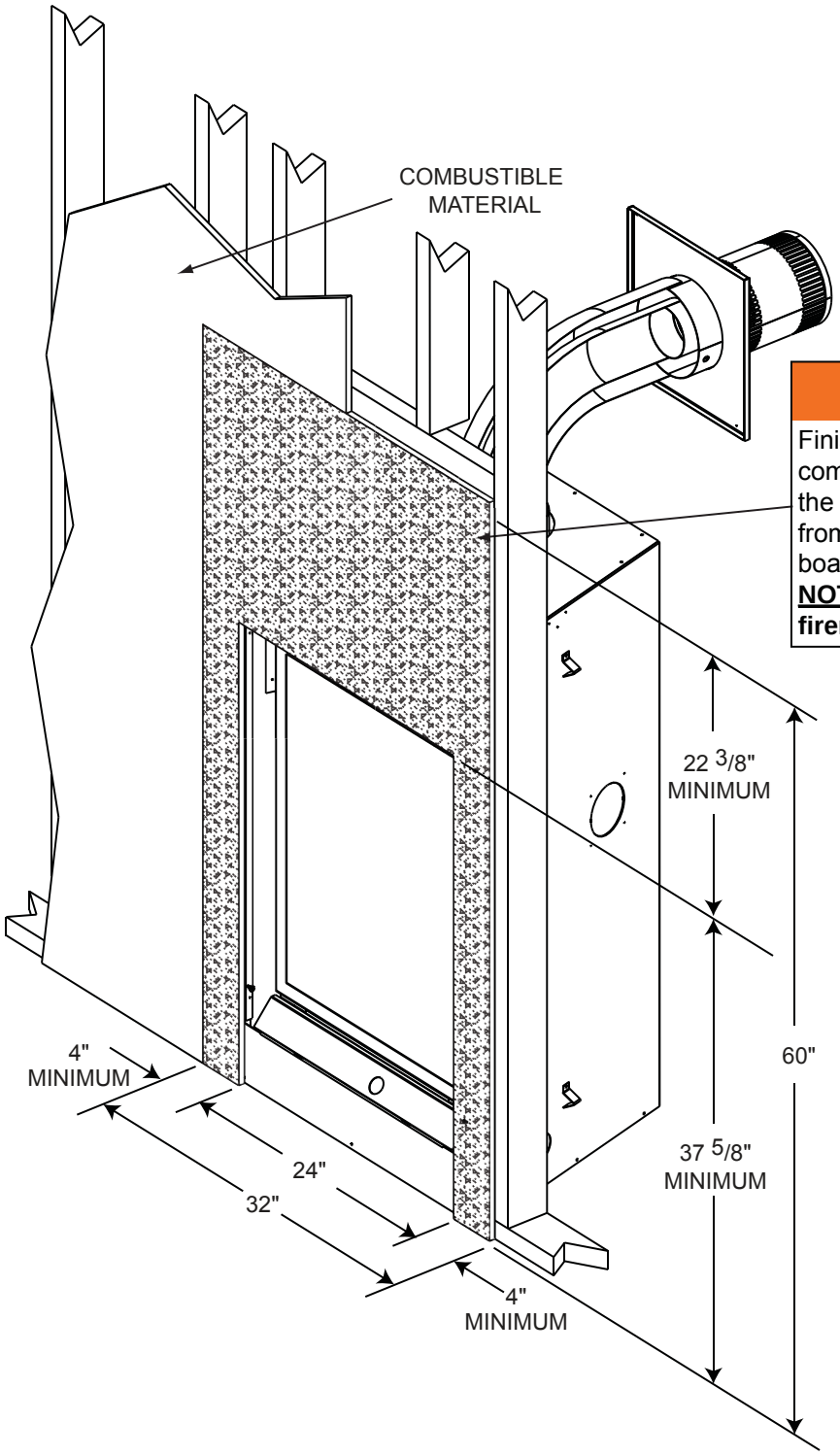

WARNING

Finishing must be done using a non-combustible material placed flush with the front face of the unit and extending from the top of the unit such as cement board, ceramic tile, marble, etc. **DO NOT USE WOOD OR DRYWALL. Any firerated drywall is not acceptable.**

5.3 MINIMUM MANTEL CLEARANCES

⚠ WARNING

RISK OF FIRE, MAINTAIN ALL SPECIFIED AIR SPACE CLEARANCES TO COMBUSTIBLES. FAILURE TO COMPLY WITH THESE INSTRUCTIONS MAY CAUSE A FIRE OR CAUSE THE APPLIANCE TO OVERHEAT. ENSURE ALL CLEARANCES (I.E. BACK, SIDE, TOP, VENT, MANTEL, FRONT, ETC.) ARE CLEARLY MAINTAINED.

WHEN USING PAINT OR LACQUER TO FINISH THE MANTEL, THE PAINT OR LACQUER MUST BE HEAT RESISTANT TO PREVENT DISCOLOURATION.

73.1

Combustible mantel clearance can vary according to the mantel depth.
Use the graph to help evaluate the clearance needed.

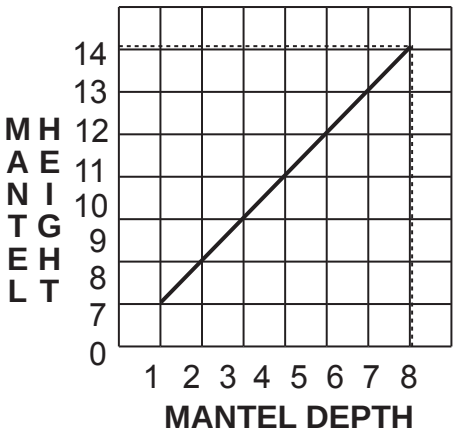

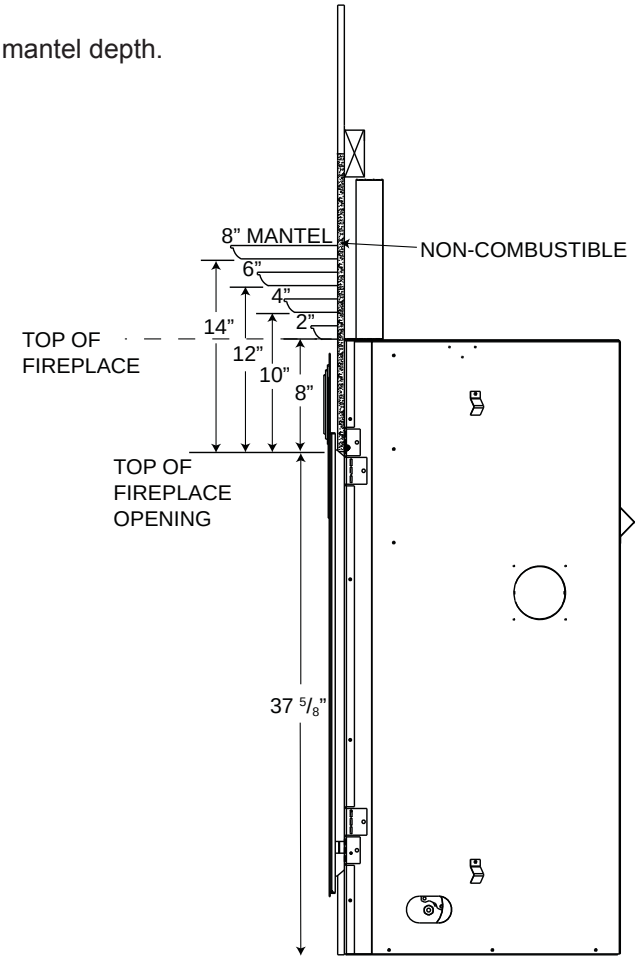

6.0 FINISHING

⚠ WARNING

RISK OF FIRE!

NEVER OBSTRUCT THE FRONT OPENING OF THE APPLIANCE.

THE FRONT OF THE APPLIANCE MUST BE FINISHED WITH ANY NON-COMBUSTIBLE MATERIALS SUCH AS BRICK, MARBLE, GRANITE, ETC., PROVIDED THAT THESE MATERIALS DO NOT GO BELOW THE SPECIFIED DIMENSION AS ILLUSTRATED.

DO NOT STRIKE, SLAM OR SCRATCH GLASS. DO NOT OPERATE APPLIANCE WITH GLASS REMOVED, CRACKED, BROKEN OR SCRATCHED.

FACING AND/OR FINISHING MATERIAL MUST NEVER OVERHANG INTO THE APPLIANCE OPENING.

THE GLASS DOOR ASSEMBLY IS DESIGNED TO PIVOT FORWARD WHEN RELIEVING EXCESS PRESSURE THAT MIGHT OCCUR. FINISHING OR OTHER MATERIALS MUST NOT BE LOCATED IN THE OPENING SURROUNDING THE DOOR AS THIS WILL INTERFERE WITH THE DOORS ABILITY TO RELIEVE THE PRESSURE.

72.6

6.1 DOOR REMOVAL / INSTALLATION

⚠ WARNING

GLASS MAY BE HOT, DO NOT TOUCH GLASS UNTIL COOLED.

THE DOOR LATCHES ARE PART OF A SAFETY SYSTEM AND MUST BE PROPERLY ENGAGED. DO NOT OPERATE THE APPLIANCE WITH LATCHES DISENGAGED.

FACING AND/OR FINISHING MATERIALS MUST NOT INTERFERE WITH AIR FLOW THROUGH AIR OPENINGS, LOUVRES OPENINGS, OPERATION OF LOUVRES OR DOORS OR ACCESS FOR SERVICE. OBSERVE ALL CLEARANCES WHEN APPLYING COMBUSTIBLE MATERIALS.

BEFORE DOOR IS REMOVED TURN THE APPLIANCE OFF AND WAIT UNTIL APPLIANCE IS COOL TO THE TOUCH. DOORS ARE HEAVY AND FRAGILE SO HANDLE WITH CARE.

75.1

Before the glass door can be removed, the optional front must be removed.

The glass door is secured to the top front edge of the firebox with two handles. Pull the handles of the latches forward, then lift the handles out from the door frame to release the top of the door. Next, pivot the door forward until the top edge clears the front of the appliance. Carefully grip the sides of the door lifting it out from the retainer along the bottom of the door.

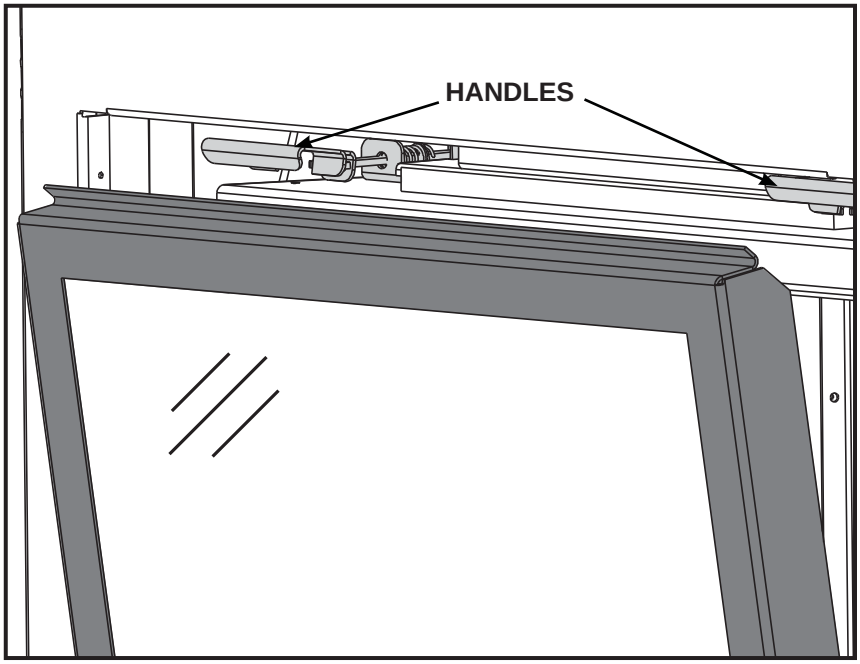

6.2 LOG SHIPPING BRACKET

Before installing the logs, you must first remove the log shipping brackets. Lift up to remove.

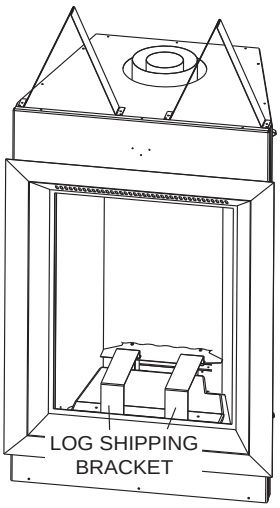

6.3 DECORATIVE BRICK PANEL INSTALLATION

Decorative panels may discolor after time.

A. Carefully remove the glass door and all logs see "FINISHING" section.

B. Remove the two screws holding the front portion of the rear air deflector. Remove the pilot shield by removing the two screws as illustrated.

C. Remove the 3 screws holding the burner down and carefully remove the burner.

D. Install the right brick panel by sliding the bottom edge of the panel down the right firebox side then pivot the top edge of the panel into place against the firebox wall. Hold in place with the brick retainers.

E. Rest the bottom edge of the rear panel on top of the rear portion of the air deflector at the back of the firebox and push into place. The rear panel is held in place when both side panels are in position.

F. Install the left brick panel using the same method described in step 4.

G. Replace the burner, air deflector, logs and glass door.

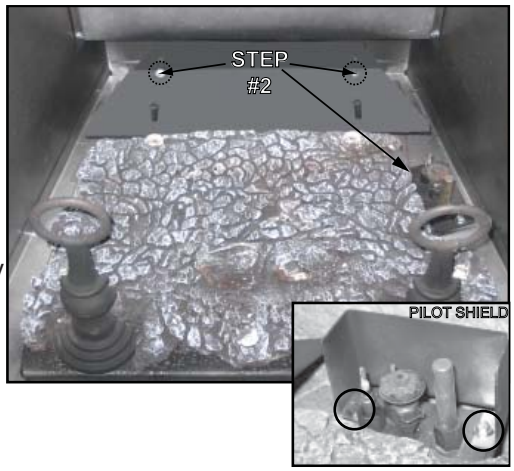

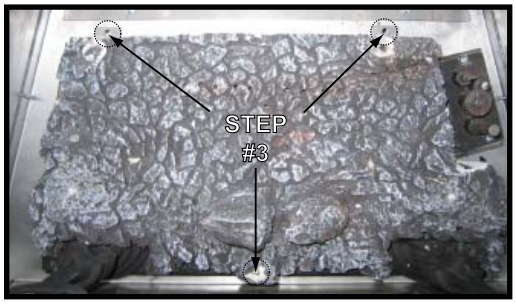

<u>NOTE:</u> Due to the brittle material of the bricks, care must be taken not to bend or force them into place. Refractory panels require a 24 hour curing period on a low flame.

HERRINGBONE PATTERN ILLUSTRATED

6.4 LOG PLACEMENT

⚠ WARNING

FAILURE TO POSITION THE LOGS IN ACCORDANCE WITH THESE DIAGRAMS OR FAILURE TO USE ONLY LOGS SPECIFICALLY APPROVED WITH THIS APPLIANCE MAY RESULT IN PROPERTY DAMAGE OR PERSONAL INJURY.

LOGS MUST BE PLACED IN THEIR EXACT LOCATION IN THE APPLIANCE. DO NOT MODIFY THE PROPER LOG POSITIONS, SINCE APPLIANCE MAY NOT FUNCTION PROPERLY AND DELAYED IGNITION MAY OCCUR.

THE LOGS ARE FRAGILE AND SHOULD BE HANDLED WITH CARE.

76.1A

The individual logs can be easily identified by the numbers cast on the underside of each log. Phazer™ logs and glowing embers exclusive to Wolf Steel Ltd., provide a unique and realistic glowing effect that is different in every installation. Take time to carefully position the glowing embers for a maximum glowing effect. During the initial use of the appliance, log colours may vary. During the initial use of the appliance the colours will become more uniform as colour pigments burn in during the heat activated curing process.

<u>NOTE:</u> Decorative brick panels must be installed before the logs. See installation instructions supplied with the panel kit.

A. Place the rear log #1 onto the locating studs along the back edge of the PHAZERAMIC™ burner.

B. Position log #2 in the 2 locating holes behind the andirons.

C. Place log #3, with the charred branch facing inward. Position the pin in log #3 into the hole on the left of the log #2.

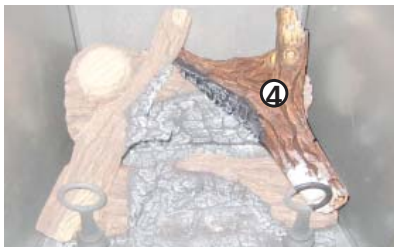

D. Place log #4 with the charred branch facing inward. Position the pin in log #4 into the hole on the right of log #2.

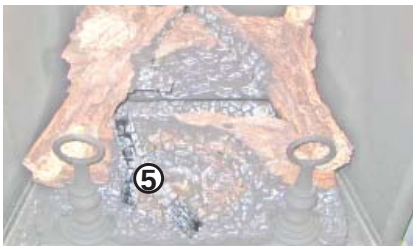

E. Place log #5 so the locating hole on the bottom of the log sits on the screw and spacer.

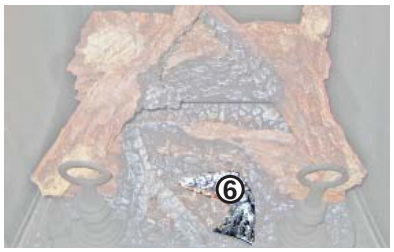

F. Finally, align the rectangular peg on log #6 with the notch on the front right portion of the burner.

6.5 GLOWING EMBERS

Glowing embers are NOT recommended. The burner has been designed to achieve maximum glow without embers.

6.6 AFK82/RFK82 FACING KIT INSTALLATION

A. Attach screw and spacer as illustrated to the bottom and top of both sides of the front housing.

B. Attach the two hooks as illustrated using the screws supplied. (The hooks must be installed on the inside of the bracket). These hooks will catch the front in the event the latch disengages.

C. Lift and hook the faceplate over the spacers, starting with the bottom then pivoting the top into place. Push the top of the faceplate so the male catch engages the female catch.

D. The tension of the catch is easily adjusted by using a slotted screwdriver on the set screw of the female catch.

<u>NOTE:</u> A 1/4" gap must be maintained between the front and all finishing material due to regular removal.

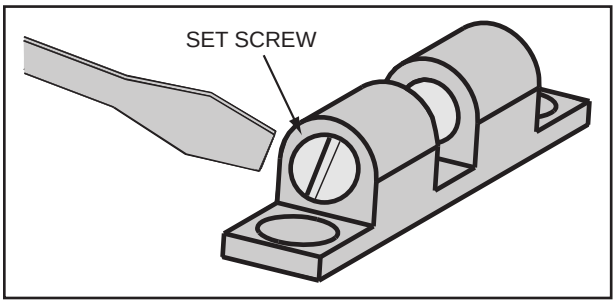

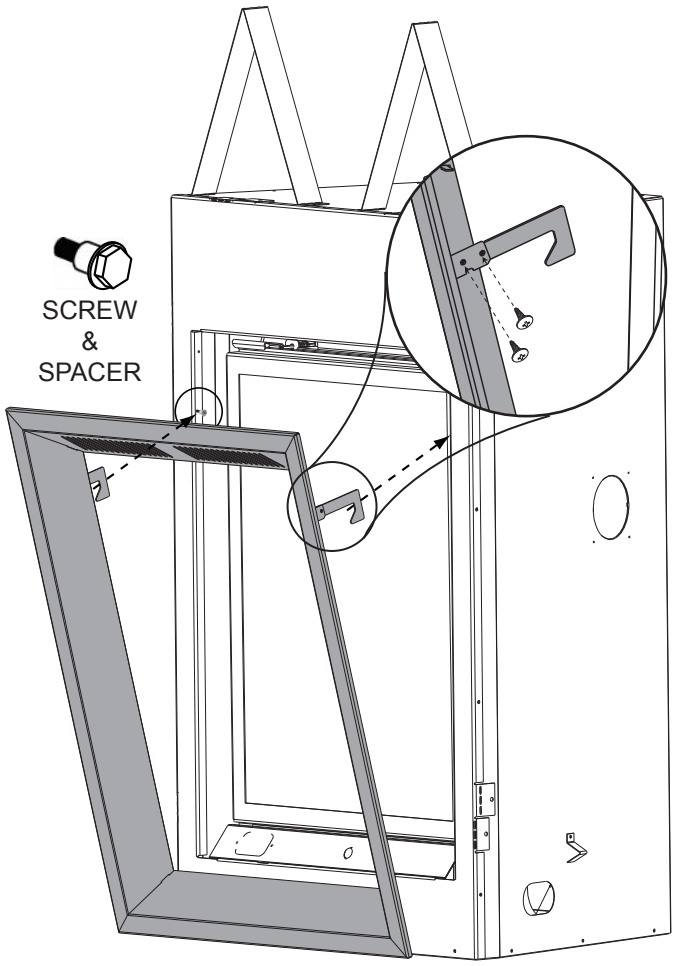

RFK82 ILLUSTRATED

7.0 WIRING DIAGRAM / ELECTRICAL INFORMATION

7.1 ELECTRICAL CONNECTION

⚠ WARNING

DO NOT USE THIS APPLIANCE IF ANY PART HAS BEEN UNDER WATER. CALL A QUALIFIED SERVICE TECHNICIAN IMMEDIATELY TO HAVE THE APPLIANCE INSPECTED FOR DAMAGE TO THE ELECTRICAL CIRCUIT.

RISK OF ELECTRICAL SHOCK OR EXPLOSION. DO NOT WIRE 110V TO THE VALVE OR TO THE APPLIANCE WALL SWITCH. INCORRECT RIGGING WILL DAMAGE CONTROLS.

ALL WIRING SHOULD BE DONE BY A QUALIFIED ELECTRICIAN AND SHALL BE IN COMPLIANCE WITH LOCAL CODES. IN THE ABSENCE OF LOCAL CODES, USE THE CURRENT CSA22.1 CANADIAN ELECTRIC CODE IN CANADA OR THE CURRENT NATIONAL ELECTRIC CODE ANSI/ NFPA NO. 70 IN THE UNITED STATES.

ALWAYS LIGHT THE PILOT WHETHER FOR THE FIRST TIME OF IF THE GAS SUPPLY HAS RAN OUT, WITH THE GLASS DOOR OPENED OR REMOVED.

7.1.1 HARD WIRING CONNECTION

It is necessary to hard wire this appliance.
Permanently framing the appliance with an enclosure, requires the appliance junction box to be hard wired. This appliance must be electrically connected and grounded in accordance with local codes. In the absence of local codes, use the current CSA C22.1 Canadian electrical code in Canada or the ANSI/NFPA 70-1996 National electrical code in the United States.

7.1.2 SCHEMATIC

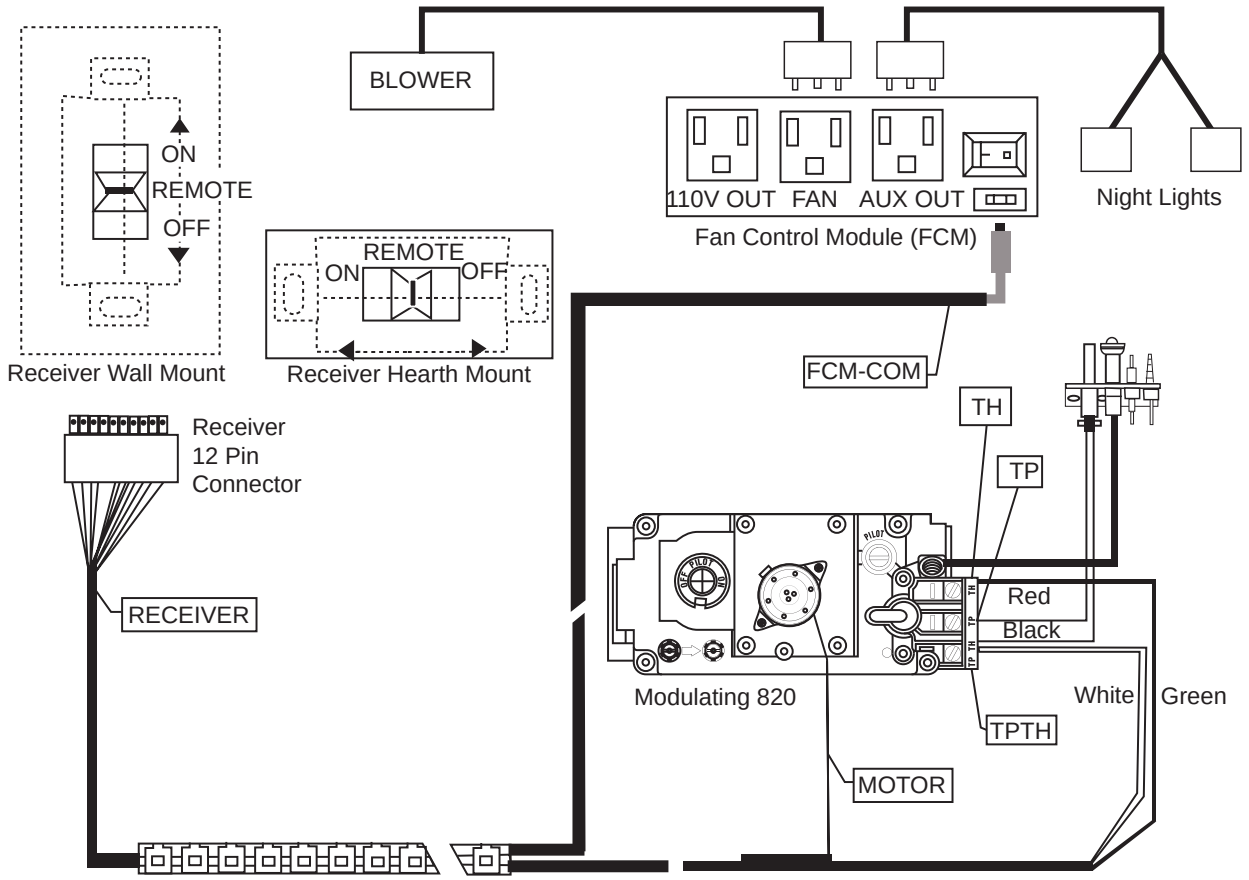

8.0 OPERATION

⚠ WARNING

IF YOU DO NOT FOLLOW THESE INSTRUCTIONS EXACTLY, A FIRE OR EXPLOSION MAY RESULT CAUSING PROPERTY DAMAGE, PERSONAL INJURY OR LOSS OF LIFE.

ALWAYS LIGHT THE PILOT WHETHER FOR THE FIRST TIME OR IF THE GAS SUPPLY HAS RUN OUT WITH THE GLASS DOOR OPENED OR REMOVED.

8.1 GENERAL TRANSMITTER LAYOUT

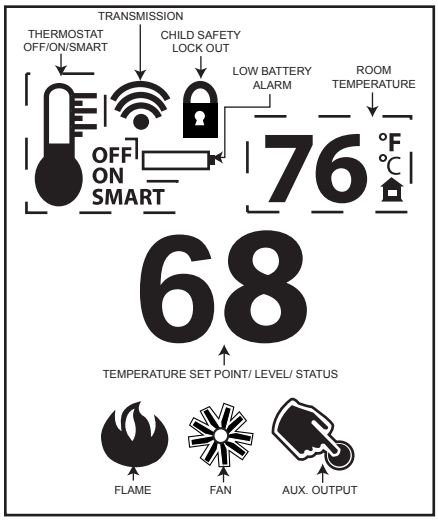

35.1

8.2 APPLIANCE OPERATION

A. Install 4 AA batteries into the receiver battery bay as indicated on the battery cover (+/-). (Only required as back up to household electricity). While there is a provision to connect a 6V battery pack (do not use a 9 volt battery), it must not be used when using the remote control receiver.

B. Place the 3 position slider switch in the “Remote” position.

C. Using the end of a paper clip, or other similar object, insert the end of the paper clip into the hole marked “PRG” on the receiver front cover. The receiver will “beep” three (3) times to indicate that it is ready to synchronize with the transmitter.

D. Install the 3 AAA batteries in the transmitter battery bay, located on the base of the transmitter. With the batteries already installed in the transmitter, push the “ON” button. The receiver will “beep” four times to indicate the transmitter’s command is accepted and set to the particular code of that transmitter. The system is now initialized.

35.2

8.3 HAND HELD REMOTE OPERATIONS

A. Press the ON/OFF key on the transmitter. The transmitter display will show all active icons on the screen. A single “beep” from the receiver will confirm reception of the command.

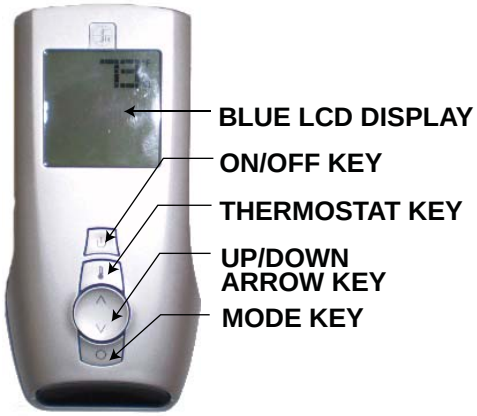

35.4

8.4 TEMPERATURE DISPLAY

A. With the system in the “OFF” position, press the Thermostat Key and the Mode Key at the same time to change from degrees F to C.

B. Look at the LCD screen on the Transmitter to verify that a C or F is visible to the right of the Room Temperature display.

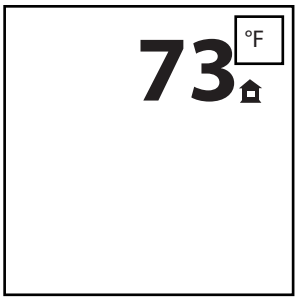

35.5

8.5 ROOM THERMOSTAT

The remote transmitter can operate as a room thermostat.
The thermostat can be set to a desired temperature to control the comfort level in the room.

A. Press the Thermostat Key. The LCD display on the Transmitter will show that the room is “ON” and the set temperature is now displayed.

B. To adjust the set temperature, press the Up/Down Arrow Keys until the desired set temperature is displayed on the LCD screen of the Transmitter.

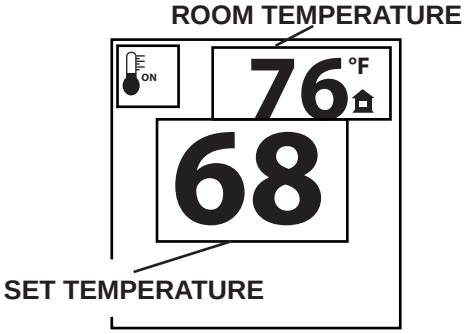

35.6

8.6 SMART THERMOSTAT

The Smart Thermostat function adjusts the flame height according to the difference between the set temperature and the actual room temperatures. As the room temperature gets closer to the set point the Smart Function will automatically adjust the flame down.

A. Press the thermostat key unit the word “SMART” appears to the right of the temperature bulb graphic.

B. To adjust the set temperature, press the Up/Down arrow keys until the desired set temperature is displayed on the LCD screen at the Transmitter.

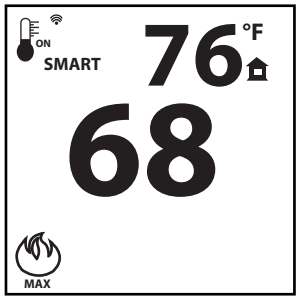

35.7

8.7 FLAME HEIGHT

The remote control has six (6) flame levels. With the system on and the flame level at the maximum, press the Down Arrow Key once and it will reduce the flame height by one step until the flame is turned off.
The Up Arrow Key will increase the flame height each time it is pressed. If the Up Arrow Key is pressed while the system is on but the flame is off, the flame will come on the high position. A single “beep” will confirm reception of the command.

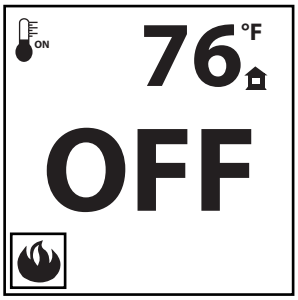

FLAME OFF

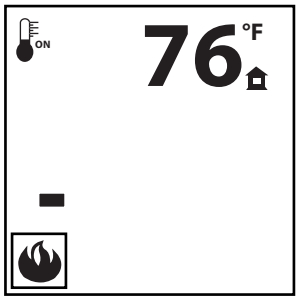

FLAME AT LEVEL 1

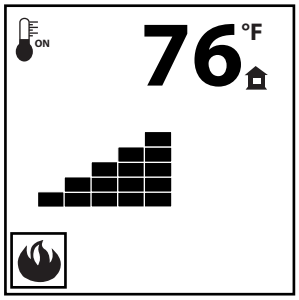

FLAME AT LEVEL 5

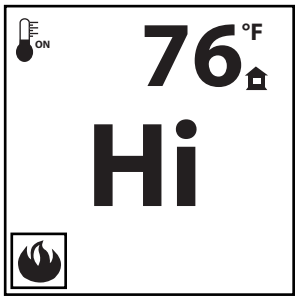

FLAME AT “HI” LEVEL 6

35.8

8.8 FAN SPEED

If the appliance is equipped with a hot air circulating fan, the speed of the fan can be controlled by the remote system. The fan speed can be adjusted through six (6) speeds.

A. Use the Mode key to guide you to the fan control icon.

B. Use the Up/Down Arrow keys to turn ON/OFF or adjust the fan speed. A single “beep” will confirm reception of the command.

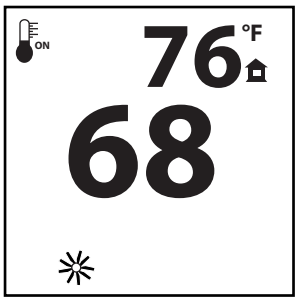

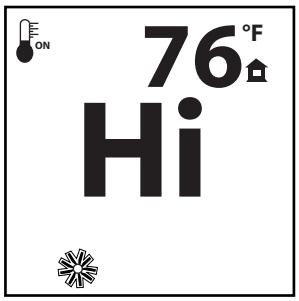

35.9

8.9 CHILD PROOF FUNCTION

This function will lock the keys to avoid unsupervised operation.

A. Press the MODE and UP keys at the same time.

B. To de-activate this function, press the MODE and UP keys at the same time.

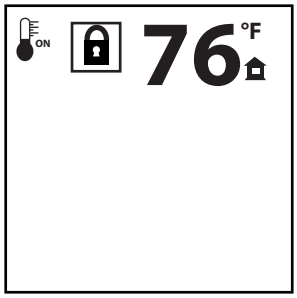

35.10

8.10 REMOTE AUXILIARY OUTLET

The auxiliary function controls the AUX power outlet on the Control Module which controls the NIGHT LIGHT™.

A. Use the Mode Key to guide you to the AUX icon.

B. Pressing the Up Arrow Key will activate the NIGHT LIGHT™.

C. Pressing the Down Arrow Key will turn the NIGHT LIGHT™ off. A single “beep” will confirm the reception of the command.

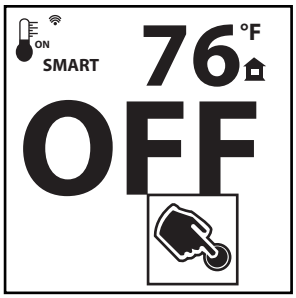

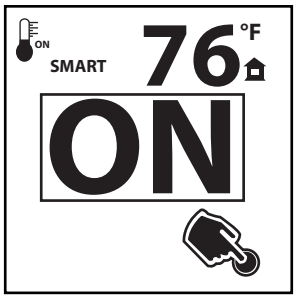

35.12

8.11 LOW BATTERY / MANUAL BYPASS

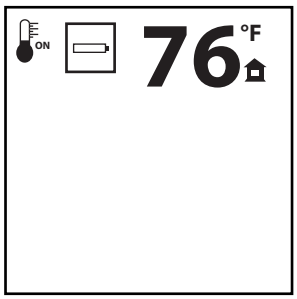

The life span of the remote batteries depends on various factors: quality of the batteries, the number of ignitions, the number of charges to the room thermostat set point, etc.

When the transmitter batteries are low, a Battery Icon will appear on the LCD display before all battery power is lost. When the batteries are replaced this icon will disappear.

Not applicable when plugged into 110V.
When the receiver batteries are low, no “beep” will be emitted from the receiver when it receives an ON/OFF command. This in an alert for the receiver that there’s low battery. When the batteries are replaced the “beep” will be emitted from the receiver when the ON/OFF key is pressed.

If the batteries of the receiver or transmitter are low, the appliance can be turned on manually by sliding the three position slider switch on the receiver to the “ON” position. This will bypass the remote control feature and the appliance main burner will come on if the gas valve is in the “ON” position.

35.13

8.12 IN THE EVENT OF A POWER FAILURE

If the receiver is equipped with batteries they will enable flame height control, ON/OFF or thermostat function to control the fireplace during a power failure. Refer to “FIREPLACE OPERATION” section when communications between receiver and transmitter have been lost. The will receiver emit a “beep” sound to confirm programming has been successful once power is restored. During a power failure, if the fireplace was on, the flame height will stay at the setting prior to the failure. If off when the failure occurs and then turned on, the flame height will come on at “HI”. The flame height can then be controlled by the remote.

35.14

8.13 FAN CONTROL MODULE

Control module offers the added ability to control the fan speed through six (6) speeds, a remotely actuated 120V AUX outlet for the NIGHT LIGHT™ and a constantly powered 120V outlet.

<u>NOTE:</u> Control module ON/OFF switch should always be in the “ON” position. If for any reason the module is turned “OFF”, the components plugged into the module won’t have power.

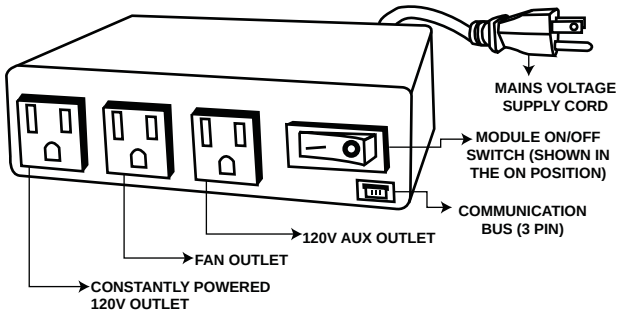

35.15

8.14 TIMED BLOWER

Your remote system may have a built in timer (in thermostat mode) that enables the blower to cycle on and off automatically when the burner turns on and off. With the remote control fan speed preset at the preferred speed, the blower will come on approximately 5 minutes after the main burner comes on and will shut off approximately 12 minutes after the burner shuts off.
This time delay is designed to maximize the blower distribution of heated air.
If at any time the burner re-ignites before the twelve minutes are over, the fan will continue to run.

<u>NOTE:</u> At any time in the sequence, the blower can be manually turned on/off using the remote control.

35.19A

9.0 OPERATING INSTRUCTIONS

⚠ WARNING

IF YOU DO NOT FOLLOW THESE INSTRUCTIONS EXACTLY, A FIRE OR EXPLOSION MAY RESULT CAUSING PROPERTY DAMAGE, PERSONAL INJURY OR LOSS OF LIFE.

ALWAYS LIGHT THE PILOT WHETHER FOR THE FIRST TIME OR IF THE GAS SUPPLY HAS RUN OUT WITH THE GLASS DOOR OPENED OR REMOVED.

Ensure that a continuous gas flow is at the burner before installing the door. When lit for the first time, the fireplace will emit an odor for a few hours. This is a normal temporary condition caused by the "burn-in" of paints and lubricants used in the manufacturing process and will not occur again. After extended periods of non-operation such as following a vacation or a warm weather season, the fireplace may emit a slight odor for a few hours. This is caused by dust particles in the heat exchanger burning off. In both cases, open a window to sufficiently ventilate the room.

FOR YOUR SAFETY READ BEFORE LIGHTING:

A. This fireplace is equipped with a pilot which must be lit by hand while following these instructions exactly.
B. Before operating smell all around the fireplace area for gas and next to the floor because some gas is heavier than air and will settle on the floor.
C. Use only your hand to turn the gas control knob. Never use tools. If the knob will not turn by hand, do not try to repair it. Call a qualified service technician. Force or attempted repair may result in a fire or explosion.
D. Do not use this fireplace if any part has been under water. Immediately call a qualified service technician to inspect the fireplace and replace any part of the control system and any gas control which has been under water.

WHAT TO DO IF YOU SMELL GAS:

- Turn off all gas to the fireplace.
- Open windows.
- Do not try to light any appliance.
- Do not touch any electric switch; do not use any phone in your building.
- Immediately call your gas supplier from a neighbor's phone. Follow the gas supplier's instructions.
- If you cannot reach your gas supplier, call the fire department.

GAS KNOB

LIGHTING INSTRUCTIONS

Do not connect valve or wall switch to electricity. See installation instructions.
When lighting and re-lighting, the gas knob cannot be turned from pilot to off unless the knob is depressed slightly.

1. **STOP!** Read the safety information on the operating label.
2. Turn off all electric power to the fireplace.
3. Turn the gas knob clockwise to off.
4. Wait 5 minutes to clear out any gas. If you smell gas, including near the floor, STOP! Follow “B” on the operating label. If you don’t smell gas, go to the next step.
5. If the fireplace is equipped with a flame adjustment valve, turn clockwise to off.
6. Find pilot located in front of the back log on the right.
7. Turn gas knob clockwise to pilot.
8. This unit is equipped with an auto-spark. Depress and hold gas knob. Keep knob fully depressed for one minute, then release. If pilot does not continue to burn repeat steps 3 through 7.
9. With pilot lit, push and turn gas knob counter-clockwise to on.
10. If equipped with flame adjustment valve, turn knob to high.
11. If equipped with remote on-off switch, main burner may not come on when you turn the valve to on or high. Remote switch must be in the on position to ignite burner.
12. Turn on all electric power to the fireplace.

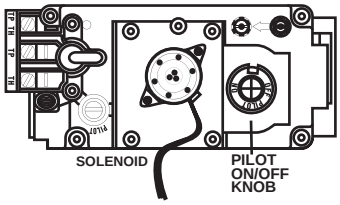

TO TURN OFF GAS

TURN OFF THE GAS AND ELECTRICAL POWER BEFORE SERVICING THE FIREPLACE.

1. Turn off all electric power to the fireplace if service is to be performed.
2. For a complete shut-down procedure: push in gas control knob slightly and turn clockwise to off. Do not force.
3. For a temporary shut-down procedure: set the switch to off. Press and turn the gas knob clockwise to pilot.

47.5

10.0 ADJUSTMENTS

10.1 RESTRICTING VERTICAL VENTS

Vertical terminations may display a very active flame. If this appearance is not desirable, the vent exit must be restricted using restrictor plate W500-0205. This reduces the velocity of the exhaust gases, slowing down the flame pattern and creating a more traditional appearance.

The plate has a series of holes to allow for adjustment. Remove the two screws on either side of the exhaust collar inside the firebox. Install the plate in the desired set of holes, then replace the screws.

It is recommended to secure in the third set of holes which causes the greatest amount of restriction for vent lengths between 15 and 30 feet.

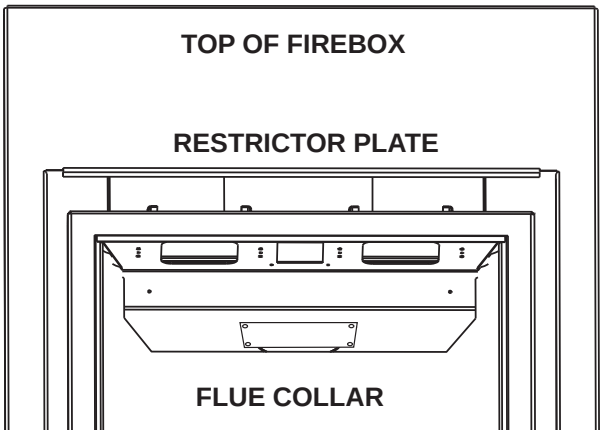

10.2 PILOT BURNER ADJUSTMENT

Adjust the pilot screw to provide properly sized flame. Turn in a clockwise direction to reduce the gas flow.

Inlet pressure can be checked by turning screw (A) counter-clockwise until loosened and then placing pressure gauge tubing over the test point. Gauge should read 7” (minimum 4.5”) water column for natural gas or 13” (11” minimum) water column for propane. Check that main burner is operating on “HI”.

Outlet pressure can be checked the same as above using screw (B). Gauge should read 3.5” water column for natural gas or 10” water column for propane. Check that main burner is operating on “HI”.

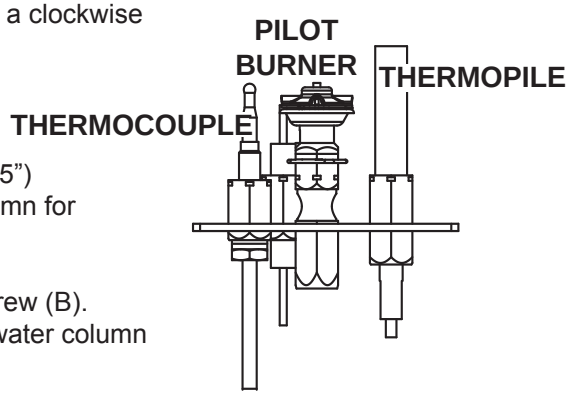

AFTER TAKING PRESSURE READINGS, TIGHTEN SCREWS FIRMLY TO SEAL. DO NOT OVER TORQUE. LEAK TEST.

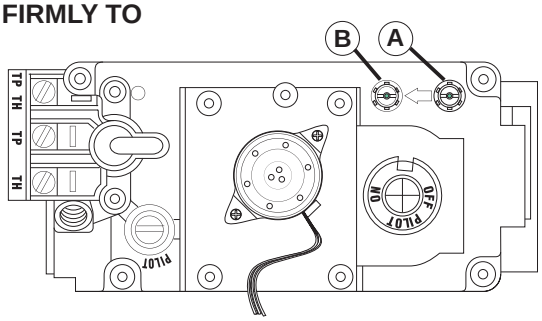

39.2

10.3 VENTURI ADJUSTMENT

This appliance has an air shutter that has been factory set open according to the chart below:

Regardless of venturi orientation, closing the air shutter will cause a more yellow flame, but can lead to carboning. Opening the air shutter will cause a more blue flame, but can cause flame lifting from the burner ports. The flame may not appear yellow immediately; allow 15 to 30 minutes for the final flame color to be established.

AIR SHUTTER ADJUSTMENT MUST ONLY BE DONE BY A QUALIFIED INSTALLER!

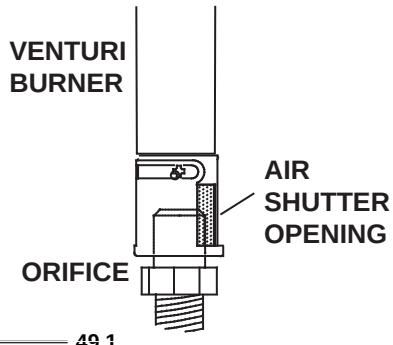

49.1

AIR SHUTTER OPENINGS	
LP	1/2”
NG	1/16”

10.4 FLAME CHARACTERISTICS

It’s important to periodically perform a visual check of the pilot and burner flames. Compare them to the illustrations provided. If any flames appear abnormal call a service person.

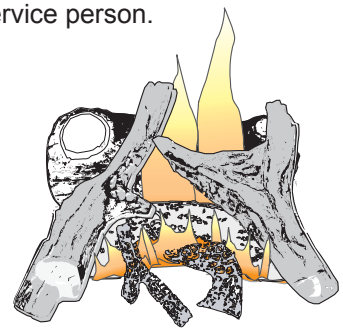

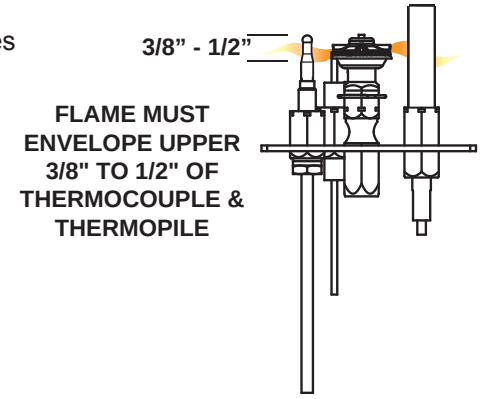

54.2

11.0 MAINTENANCE

⚠ WARNING

TURN OFF THE GAS AND ELECTRICAL POWER BEFORE SERVICING THE APPLIANCE.

APPLIANCE MAY BE HOT, DO NOT SERVICE UNTIL APPLIANCE HAS COOLED.

DO NOT USE ABRASIVE CLEANERS.

CAUTION: Label all wires prior to disconnection when servicing controls. Wiring errors can cause improper and dangerous operation. Verify proper operation after servicing. This appliance and its venting system should be inspected before use and at least annually by a qualified service person. The appliance area must be kept clear and free of combustible materials, gasoline or other flammable vapors and liquids. The flow of combustion and ventilation air must not be obstructed.

1. In order to properly clean the burner and pilot assembly, remove the logs, rocks and/or glass to expose both assemblies.

2. Keep the control compartment, media, burner, air shutter opening and the area surrounding the logs clean by vacuuming or brushing, at least once a year.

3. Check to see that all burner ports are burning. Clean out any of the ports which may not be burning or are not burning properly.

4. Check to see that the pilot flame is large enough to engulf the flame sensor and/or thermocouple / thermopile as well as reaches the burner.

5. Replace the cleaned logs, rocks or glass. Failure to properly position the media may cause carboning which can be distributed in the surrounding living area.

6. Check to see that the main burner ignites completely on all openings when turned on. A 5 to 10 second total light-up period is satisfactory. If ignition takes longer, consult your local authorized dealer / distributor.

7. Check that the gasketing on the sides, top and bottom of the door is not broken or missing. Replace if necessary.

8. If for any reason the vent air intake system is disassembled, re-install and re-seal per the instructions provided for the initial installation.

40.1

11.1 BURNER AND VALVE REPLACEMENT

A. **Optional Front Removal**.
Pull on the top of the optional front away from the appliance until the male portion of the latch disengages. Tilt forward slightly and lift from the 4 shoulder screws (if installed).

B. **Control Panel Removal**
Tilt control panel away from the door and lift from slots.

C. Turn Power and Gas off to the unit.

D. **Door Removal.** See “DOOR REMOVAL” section.

E. **Burner Removal**
Start by removing the logs being careful since the logs may still be warm. Remove the 2 screws holding the air deflector then remove the 3 screws holding the burner. Lift burner from firebox.

F. Remove the 5 screws securing the burner base. Once the gas has been disconnected, the valve train assembly will lift out. Service components as required.

11.2 SPARK MODULE BATTERY INSTALLATION

A. Remove optional front, see “AFK82/RFK82 FACING KIT INSTALLATION” section.

B. Tilt the control panel forward and remove allowing access to the electrode box which is screwed to the base of the firebox.

C. Pull back on the battery compartment door latch and remove.

D. Install battery.

E. Reinstall battery compartment and control doors.

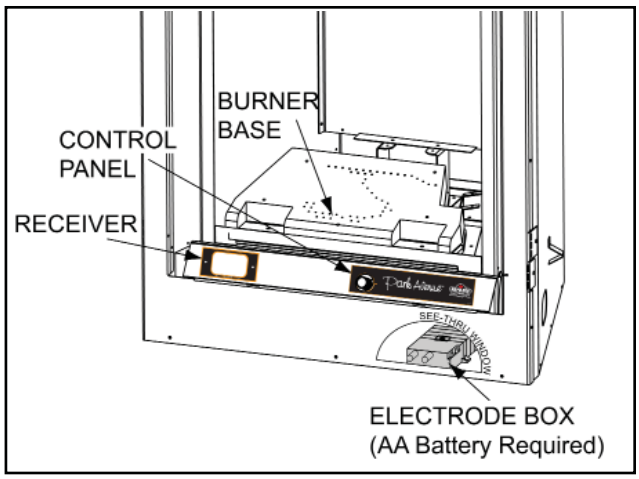

11.3 BLOWER REPLACEMENT

⚠ WARNING

BE CAREFUL NOT TO TEAR THE BURNER TRAIN GASKET. A REPLACEMENT GASKET CAN BE ORDERED FROM YOUR LOCAL AUTHORIZED DEALER.

Your Park Avenue comes equipped with a heat circulating blower. The blower is pre-wired and is controlled by the remote control supplied with the unit.

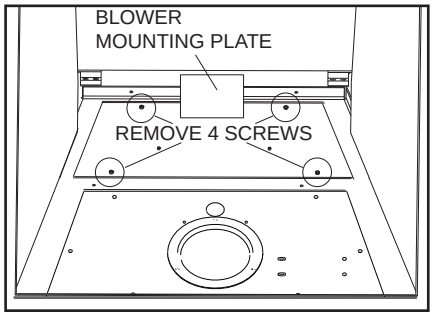

Drywall dust will penetrate into the blower bearings, causing irreparable damage. Care must be taken to prevent drywall dust from coming into contact with the blower or its compartment. Any damage resulting from this condition is not covered by the warranty policy.

A. Turn off the power to the appliance.
B. Turn off the gas valve.
C. Remove the glass door, logs, rear log supports, brick panels, air deflector, burner assembly, panel support, panel support bracket.
D. The blower mounting plate can now be removed. Remove the four screws that secure the plate to the firebox base.
E. The blower is secured to the firebox. Disconnect the wire connectors before attempting to remove the blower from the firebox.
F. Remove the two screws securing the blower and lift through blower access opening.

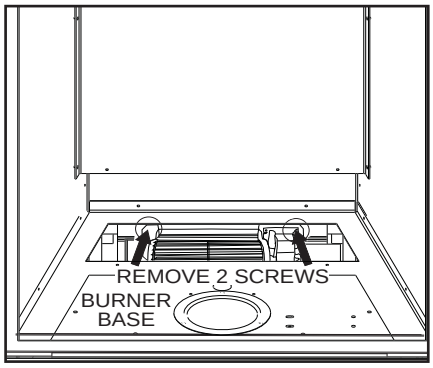

<u>NOTE:</u> When re-installing the replacement blower, it will be necessary to replace the gasket (W290-0104) on the blower mounting plate.

11.4 NIGHT LIGHT™ REPLACEMENT

Your Park Avenue comes equipped with our "Night Light™". The light has been pre-wired and is controlled from the remote control.

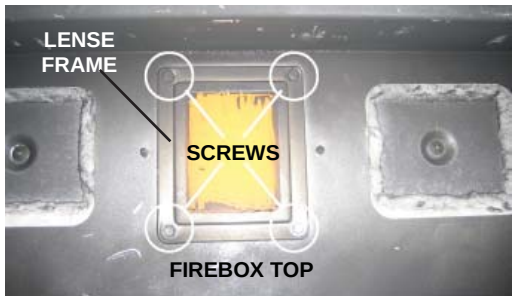

If in the event the lamp or lens needs to be replaced, follow the instructions below.

Unplug the wire harness / transformer from the FCM (Fan Control Module) inside the appliance.

Remove the four screws that secure the lens frame.
This frame retains the glass lens. The lamp can now be accessed.

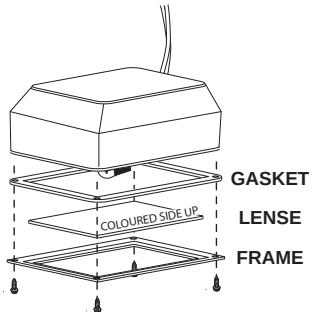

<u>NOTE:</u> Do not handle the lamp (bulb) with bare fingers, protect with a clean dry cloth.

The lamp will pull straight out of the socket. Replace with Wolf Steel parts only, as lamp and lens are special "high temperature" products. When re-installing, ensure integrity of gasket seal.

THE FIREBOX MUST BE SEALED.
Over tightening the screws could break the lens.
"Light Leakage" from the upper area may be observed. The holes in the lamp housing are necessary for ventilation and must not be covered.

11.5 GLASS / DOOR REPLACEMENT

⚠ WARNING
DO NOT USE SUBSTITUTE MATERIALS.
GLASS MAY BE HOT, DO NOT TOUCH GLASS UNTIL COOLED.
CARE MUST BE TAKEN WHEN REMOVING AND DISPOSING OF ANY BROKEN DOOR GLASS OR DAMAGED COMPONENTS. BE SURE TO VACUUM UP ANY BROKEN GLASS FROM INSIDE THE APPLIANCE BEFORE OPERATION.
DO NOT STRIKE, SLAM OR SCRATCH GLASS. DO NOT OPERATE APPLIANCE WITH GLASS REMOVED, CRACKED, BROKEN OR SCRATCHED.

A. Place the door frame face down careful not to scratch the paint.

B. Center the gasketed glass inside the door frame with the thick side of the gasket facing up.

C. Bend the glass retainers located along the edge of the door frame over the gasket holding the glass in place. Careful not to break the glass.

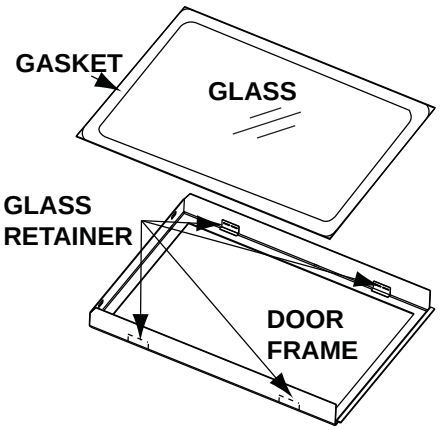

11.6 CARE OF GLASS

DO NOT CLEAN GLASS WHEN HOT! DO NOT USE ABRASIVE CLEANERS TO CLEAN GLASS.

Buff lightly with a clean dry soft cloth. Clean both sides of the glass after the first 10 hours of operation with a recommended fireplace glass cleaner. Thereafter clean as required. If the glass is not kept clean permanent discoloration and / or blemishes may result.

5.1

11.7 CARE OF PLATED PARTS

If the appliance is equipped with plated parts, you must clean fingerprints or other marks from the plated surfaces before operating the appliance for the first time. Use a glass cleaner or vinegar and towel to clean. If not cleaned properly before operating for the first time, the marks can cause permanent blemishes on the plating. After the plating is cured, the fingerprints and oils will not affect the finish and little maintenance is required, just wipe clean as needed. Prolonged high temperature burning with the door ajar may cause discolouration on plated parts.

NOTE: The protective wrap on plated parts is best removed when the assembly is at room temperature but this can be improved if the assembly is warmed, using a hair dryer or similar heat source.

6.1

12.0 REPLACEMENT PARTS

⚠ WARNING

FAILURE TO POSITION THE PARTS IN ACCORDANCE WITH THIS MANUAL OR FAILURE TO USE ONLY PARTS SPECIFICALLY APPROVED WITH THIS APPLIANCE MAY RESULT IN PROPERTY DAMAGE OR PERSONAL INJURY.

**** THIS IS A FAST ACTING THERMOCOUPLE. IT IS AN INTEGRAL SAFETY COMPONENT. REPLACE ONLY WITH A FAST ACTING THERMOCOUPLE SUPPLIED BY WOLF STEEL LTD.**

Contact your dealer or the factory for questions concerning prices and policies on replacement parts. Normally all parts can be ordered through your Authorized dealer / distributor.

FOR WARRANTY REPLACEMENT PARTS, A PHOTOCOPY OF THE ORIGINAL INVOICE WILL BE REQUIRED TO HONOUR THE CLAIM.

When ordering replacement parts always give the following information:

- Model & Serial Number of appliance
- Installation date of appliance
- Part number
- Description of part
- Finish

*** IDENTIFIES ITEMS WHICH ARE NOT ILLUSTRATED. FOR FURTHER INFORMATION, CONTACT YOUR AUTHORIZED DEALER.**

41.2

COMPONENTS		
REF NO.	**PART NO.**	**DESCRIPTION**
1	W135-0267	#1 - REAR LOG
2	W135-0268	#2 - MIDDLE LOG
3	W135-0269	#3 - RIGHT LOG
4	W135-0270	#4 - LEFT LOG
5	W135-0273	#5 - LEFT STICK
6	W135-0274	#6 - RIGHT STICK
7	GL-654	LOG SET ASSEMBLY
8*	W010-2075	DOOR LATCH ASSEMBLY
9	W725-0047	NATURAL GAS VALVE - MODULATING
9	W725-0048	PROPANE GAS VALVE - MODULATING
10	W456-0043	NATURAL GAS ORIFICE #43
10	W456-0054	PROPANE GAS ORIFICE #54
11	W680-0005	THERMOCOUPLE
12	W240-0006	ELECTRODE C/W LEAD
13	W680-0004	THERMOPILE
14	W010-1194	NATURAL GAS PILOT ASSEMBLY
14	W010-1201	PROPANE GAS PILOT ASSEMBLY
15	W455-0070	NG PILOT INJECTOR
15	W455-0068	LP PILOT INJECTOR
16*	W385-0334	NAPOLEON® LOGO
17*	W562-0062	DOOR GASKET (100 INCHES)
18	W100-0087	BURNER
19	GZ552	BLOWER
20	W660-0041	SPARK SWITCH
21	W660-0071	REMOTE TRANSMITTER
22	W660-0099	REMOTE RECEIVER
23*	W190-0017	DC SPARK UNIT CONTROL
24	W300-0067	ACCENT LIGHT GLASS
25	W387-0006	ACCENT LAMP

COMPONENTS		
REF NO.	**PART NO.**	**DESCRIPTION**
26	W750-0178	ACCENT LIGHT WIRE
27	W290-0080	ACCENT LENS GASKET
28*	W010-1453	INSULATION SLEEVE
29	W225-0240	DOOR
30*	W010-1500	GLASS C/W GLASS AND GASKET
31*	W500-0205	RESTRICTOR
32	W010-1799	FIRESTOP SPACER
33*	W660-0086	FAN CONTROL MODULE

FLEXIBLE VENT KITS		
REF NO.	**PART NO.**	**DESCRIPTION**
GD-220 (5 FT)		
34*	W010-0397	4” FLEXIBLE VENT PIPE - (5 FT) C/W SPACERS
34*	W410-0017	7” FLEXIBLE VENT PIPE - (5 FT)
GD-330 (10 FT)		
35*	W010-0300	4” FLEXIBLE VENT PIPE - (10 FT) C/W SPACERS
35*	W410-0018	7” FLEXIBLE VENT PIPE - (10 FT)
36*	W010-0370	WALL SUPPORT ASSEMBLY

TERMINAL KITS		
REF NO.	**PART NO.**	**DESCRIPTION**
37	GD-201	PERISCOPE
38	GD-222R	WALL TERMINAL KIT (ROUND)

ROOF TERMINAL KITS		
REF NO.	**PART NO.**	**DESCRIPTION**
39*	GD-110	1/12 TO 7/12 PITCH
40*	GD-111	8/12 TO 12/12 PITCH
41*	GD-112	FLAT ROOF
42*	W490-0073	4/7 INNER/OUTER SLEEVE
43	W670-0006	4/7 TERMINAL
44	W170-0086	STORM COLLAR
45	W010-0453	ROOF SUPPORT
46	W263-0065	ROOF FLASHING FLAT
	W263-0066	1/12 TO 7/12 FLASHING
	W263-0067	8/12 TO 12/12 FLASHING

ACCESSORIES		
REF NO.	**PART NO.**	**DESCRIPTION**
47*	W573-0007	HI-TEMP SEALANT
48*	GD-501	HEAT GUARD
49	GA-566	HOT AIR DISTRIBUTION KIT
50	GA-72	HOT AIR EXHAUST KIT
51	GA-70	EXTENSION KIT, 5FT FLEX VENT
52*	W010-0370	WALL SUPPORT ASSEMBLY
53*	W175-0001	4” COUPLER
54*	W175-0013	7” COUPLER
55*	W175-0239	CONVERSION KIT - NG TO LP
56*	W175-0240	CONVERSION KIT - LP TO NG
57	GD811-KT	HERRINGBONE/SANDSTONE BRICK KIT
57	GD812-KT	REFRACTORY PANEL KIT
58*	PRP82	PORCELAIN REFLECTIVE RADIANT PANELS
59	AFK82-1	ARCHED FACING KIT W/LATTICE PATTERN - PAINTED BLACK
59	AFK82WI-1	ARCHED FACING KIT W/LATTICE PATTERN - WROUGHT IRON
60	RFK82-1	RECTANGLE FACING KIT - PAINTED BLACK
60	RFK82N-1	RECTANGULAR FACING KIT - BROWN
60	RFK82PW-1	RECTANGULAR FACING KIT - PEWTER
61*	SFK82SS	STAINLESS STEEL SURROUND FACING KIT
62*	HK82SS	STAINLESS STEEL SURROUND HEARTH KIT
63	ANI-O	OBELISK ANDIRON
64	ANI-K	TRADITIONAL ANDIRONS

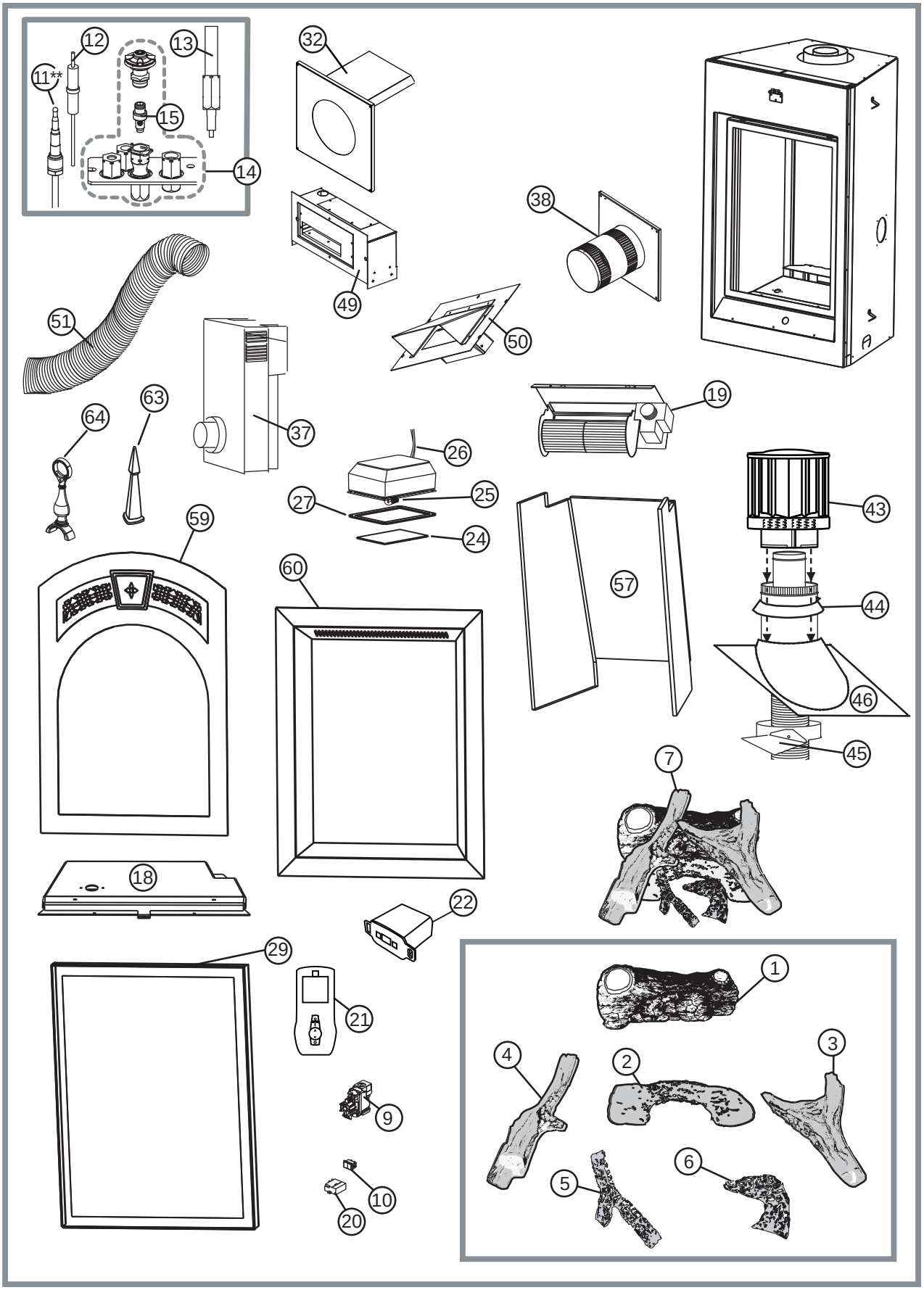
12
13
11**
15
14
32
38
49
50
51
37
19
63
64
26
25
27
24
43
59
60
57
44
46
45
7
18
22
29
21
9
10
20
1
4
2
3
5
6

13.0 TROUBLE SHOOTING GUIDE

SYMPTOM	PROBLEM		TEST SOLUTION
Main burner flame is a blue, lazy, transparent flame.	Blockage in vent.	-	Remove blockage. In really cold conditions, ice buildup may occur on the terminal and should be removed as required.
	Incorrect installation.	-	Refer to “VENTING” section to ensure correct location of storm collars.
Flames are consistently too large or too small. Carboning occurs.	Unit is over-fired or underfired.	-	**Check pressure readings:** *Inlet pressure* can be checked by turning screw (A) counter-clockwise 2 or 3 turns and then placing pressure gauge tubing over the test point. Gauge should read 7” (minimum 4.5”) water column for natural gas or 13” (minimum 11”) water column for propane. Check that main burner is operating on ‘HI’. *Outlet pressure* can be checked the same as above using screw (B). Gauge should read 3.5” water column for natural gas or 10” water column for propane. Check that main burner is operating on ‘HI’. **AFTER TAKING PRESSURE READINGS, BE SURE TO TURN SCREWS CLOCKWISE FIRMLY TO RESEAL. DO NOT OVER TORQUE.** Leak test with a soap and water solution.
Carbon is being deposited on glass, burner media or combustion chamber surfaces.	Air shutter has become blocked.	-	Ensure air shutter opening is free of lint or other obstructions.
	Flame is impinging on the burner media or combustion chamber.	-	Check that the burner media is correctly positioned.
		-	Open air shutter to increase the primary air.
		-	Check the input rate: check the manifold pressure and orifice size as specified by the rating plate values.
		-	Check that the door gasketing is not broken or missing and that the seal is tight.
		-	Check that both vent liners are free of holes and well sealed at all joints.
		-	Check that minimum rise per foot has been adhered to for any horizontal venting.
White / grey film forms.	Sulphur from fuel is being deposited on glass, burner media or combustion chamber surfaces.	-	Clean the glass with a recommended gas fireplace glass cleaner. DO NOT CLEAN GLASS WHEN HOT.
		-	If deposits are not cleaned off regularly, the glass may become permanently marked.
Exhaust fumes smelled in room, headaches.	Fireplace is spilling.	-	Ensure exhaust bracket gasket seal.
		-	Check door seal.
		-	Check for exhaust blockage.
		-	Check that venting is installed correctly.
		-	Room is in negative pressure; increase fresh air supply.

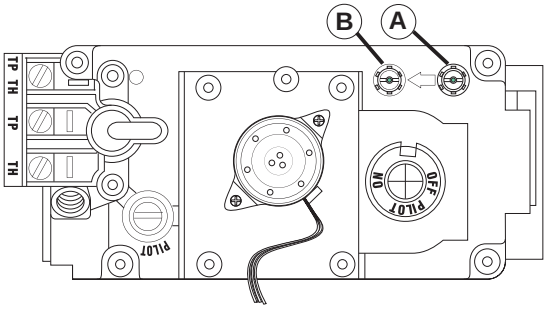

42.2A

SYMPTOM	PROBLEM	TEST SOLUTION
Main burner goes out; pilot stays on.	Pilot flame is not large enough or not engulfing the thermopile.	- Turn up the pilot flame. - Replace pilot assembly.
	Thermopile shorting.	- Clean thermopile connection to the valve. Reconnect. - Replace thermopile / valve.
	Remote wall switch wire is too long; too much resistance in the system.	- Shorten wire to connect length or wire gauge.
	Faulty thermostat or switch.	- Replace.
Main burner goes out; pilot goes out.	Refer to “MAIN BURNER GOES OUT; PILOT STAYS ON”	
	Vent is blocked	- Check for vent blockage.
	Vent is re-circulating	- Check joint seals and installation
	Flexible vent has become disconnected from fireplace.	- Re-attach to fireplace. - Cap was not replaced.
Pilot goes out when the gas knob is released. **The gas valve has an interlock device which will not allow the pilot burner to be lit until the thermocouple has cooled. Allow approximately 60 seconds for the thermocouple to cool.**	System is not correctly purged.	- Purge the gas line.
	Out of propane gas.	- Fill the tank.
	Pilot flame is not large enough.	- Turn up the pilot flame.
	Pilot flame is not engulfing the thermocouple	- Gently twist the pilot head to improve the flame pattern around the thermocouple.
	Thermocouple shorting / faulty.	- Loosen and tighten thermocouple. - Clean thermocouple and valve connection. - Replace thermocouple. - Replace valve.
	Faulty valve.	- Replace.
Pilot burning; no gas to main burner; gas knob is on ‘HI’; wall switch / thermostat is on.	Thermostat or switch is defective	- Connect a jumper wire across the wall switch terminals; if main burner lights, replace switch / thermostat.
	Wall switch wiring is defective.	- Disconnect the switch wires & connect a jumper wire across terminals 1 & 3; if the main burner lights, check the wires for defects and / or replace wires.
	Main burner orifice is plugged.	- Remove stoppage in orifice.
	Faulty valve.	- Replace.
Pilot will not light.	No spark at pilot burner.	- Check if pilot can be lit by a match. - Check that the wire is connected to the push button igniter. - Check if the push button igniter needs tightening. - Replace the wire if the wire insulation is broken or frayed. - Replace the electrode if the ceramic insulator is cracked or broken. - Replace the push button ignitor
	Out of propane gas.	- Fill the tank.
	Spark gap is incorrect.	- Spark gap should be 0.150” to 0.175” (5/32” to 11/64” approx.) from the electrode tip and the pilot burner. To ensure proper electrode location, tighten securing nut (finger tight plus 1/4 turn).
	No gas at the pilot burner.	- Check that the manual valve is turned on. - Check the pilot orifice for blockage. - Replace the valve. - Call the gas distributor.

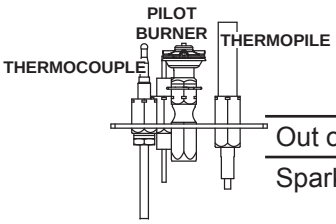

42.2_2

SYMPTOM	PROBLEM	TEST SOLUTION
Pilot goes out while standing: Main burner is in “OFF” position.	Gas piping is undersized.	- Turn on all gas appliances and see if pilot flame flutters, diminishes or extinguishes, especially when main burner ignites. Monitor appliance supply working pressure. - Check if supply piping size is to code. Correct all undersized piping.
Remote wall switch is in “OFF” position; main burner comes on when gas knob is turned to “ON” position.	Wall switch is mounted upside down.	- Reverse.
	Remote wall switch is grounding.	- Replace.
	Remote wall switch wire is grounding.	- Check for ground (short); repair ground or replace wire.
	Faulty valve.	- Replace.

42.2_3

14.0 WARRANTY

NAPOLEON® products are manufactured under the strict Standard of the world recognized ISO 9001 : 2008 Quality Assurance Certificate.

NAPOLEON® products are designed with superior components and materials assembled by trained craftsmen who take great pride in their work. The burner and valve assembly are leak and test-fired at a quality test station. The complete appliance is again thoroughly inspected by a qualified technician before packaging to ensure that you, the customer, receives the quality product that you expect from NAPOLEON®.

NAPOLEON® GAS APPLIANCE PRESIDENT'S LIFETIME LIMITED WARRANTY

The following materials and workmanship in your new NAPOLEON® gas appliance are warranted against defects for as long as you own the appliance. This covers: combustion chamber, heat exchanger, stainless steel burner, phazer™ logs and embers, rocks, ceramic glass (thermal breakage only), gold plated parts against tarnishing, porcelainized enameled components and aluminum extrusion trims.*

Electrical (110V and millivolt) components and wearable parts such as blowers, gas valves, thermal switch, switches, wiring, remote controls, ignitor, gasketing, and pilot assembly are covered and NAPOLEON® will provide replacement parts free of charge during the first year of the limited warranty.*

Labour related to warranty repair is covered free of charge during the first year. Repair work, however, requires the prior approval of an authorized company official. Labour costs to the account of NAPOLEON® are based on a predetermined rate schedule and any repair work must be done through an authorized NAPOLEON® dealer.

* Construction of models vary. Warranty applies only to components included with your specific appliance.

CONDITIONS AND LIMITATIONS

NAPOLEON® warrants its products against manufacturing defects to the original purchaser only. Registering your warranty is not necessary. Simply provide your proof of purchase along with the model and serial number to make a warranty claim. NAPOLEON® reserves the right to have its representative inspect any product or part thereof prior to honouring any warranty claim. Provided that the purchase was made through an authorized NAPOLEON® dealer your appliance is subject to the following conditions and limitations:

Warranty coverage begins on the date of original installation.

This factory warranty is non-transferable and may not be extended whatsoever by any of our representatives.

The gas appliance must be installed by a licensed, authorized service technician or contractor. Installation must be done in accordance with the installation instructions included with the product and all local and national building and fire codes.

This limited warranty does not cover damages caused by misuse, lack of maintenance, accident, alterations, abuse or neglect and parts installed from other manufacturers will nullify this warranty.

This limited warranty further does not cover any scratches, dents, corrosion or discoloring caused by excessive heat, abrasive and chemical cleaners nor chipping on porcelain enamel parts, mechanical breakage of PHAZER™ logs and embers.

This warranty extends to the repair or replacement of warranted parts which are defective in material or workmanship provided that the product has been operated in accordance with the operation instructions and under normal conditions.

After the first year, with respect to this President's Lifetime Limited Warranty, NAPOLEON® may, at its discretion, fully discharge all obligations with respect to this warranty by refunding to the original warranted purchaser the wholesale price of any warranted but defective part(s).

NAPOLEON® will not be responsible for installation, labour or any other expenses related to the reinstallation of a warranted part and such expenses are not covered by this warranty.

Notwithstanding any provisions contained in the President's Lifetime Limited Warranty, NAPOLEON'S responsibility under this warranty is defined as above and it shall not in any event extend to any incidental, consequential or indirect damages.

This warranty defines the obligations and liability of NAPOLEON® with respect to the NAPOLEON® gas appliance and any other warranties expressed or implied with respect to this product, its components or accessories are excluded.

NAPOLEON® neither assumes, nor authorizes any third party to assume, on its behalf, any other liabilities with respect to the sale of this product.

NAPOLEON® will not be responsible for: over-firing, downdrafts, spillage caused by environmental conditions such as rooftops, buildings, nearby trees, hills, mountains, inadequate vents or ventilation, excessive venting configurations, insufficient makeup air, or negative air pressures which may or may not be caused by mechanical systems such as exhaust fans, furnaces, clothes dryers, etc.

Any damages to the appliance, combustion chamber, heat exchanger, plated trim or other components due to water, weather damage, long periods of dampness, condensation, damaging chemicals or cleaners will not be the responsibility of NAPOLEON®.

All parts replaced under the President's Limited Lifetime Warranty Policy are subject to a single claim.

During the first 10 years NAPOLEON® will replace or repair the defective parts covered by the lifetime warranty at our discretion free of charge. From 10 years to life, NAPOLEON® will provide replacement parts at 50% of the current retail price.

All parts replaced under the warranty will be covered for a period of 90 days from the date of their installation.

The manufacturer may require that defective parts or products be returned or that digital pictures be provided to support the claim. Returned products are to be shipped prepaid to the manufacturer for investigation. If a product is found to be defective, the manufacturer will repair or replace such defect.

Before shipping your appliance or defective components, your dealer must obtain an authorization number. Any merchandise shipped without authorization will be refused and returned to sender.

Shipping costs are not covered under this warranty.

Additional service fees may apply if you are seeking warranty service from a dealer.

Warranty labour allowance is only for the replacement of the warranted part. Travel, diagnostic tests, shipping and other related charges are not covered by this warranty.

ALL SPECIFICATIONS AND DESIGNS ARE SUBJECT TO CHANGE WITHOUT PRIOR NOTICE DUE TO ON-GOING PRODUCT IMPROVEMENTS. NAPOLEON® IS A REGISTERED TRADEMARK OF WOLF STEEL LTD. PATENTS U.S. 5.303.693.801 - CAN. 2.073.411, 2.082.915. © WOLF STEEL LTD.

15.0 SERVICE HISTORY

Appliance Service History

This heater must be serviced annually depending on usage.

Date	Dealer Name	Service Technician Name	Service Performed	Special Concerns